PARSUN
Power Your Dream
www.parsunpower.com

零件目录

PARTS CATALOGUE

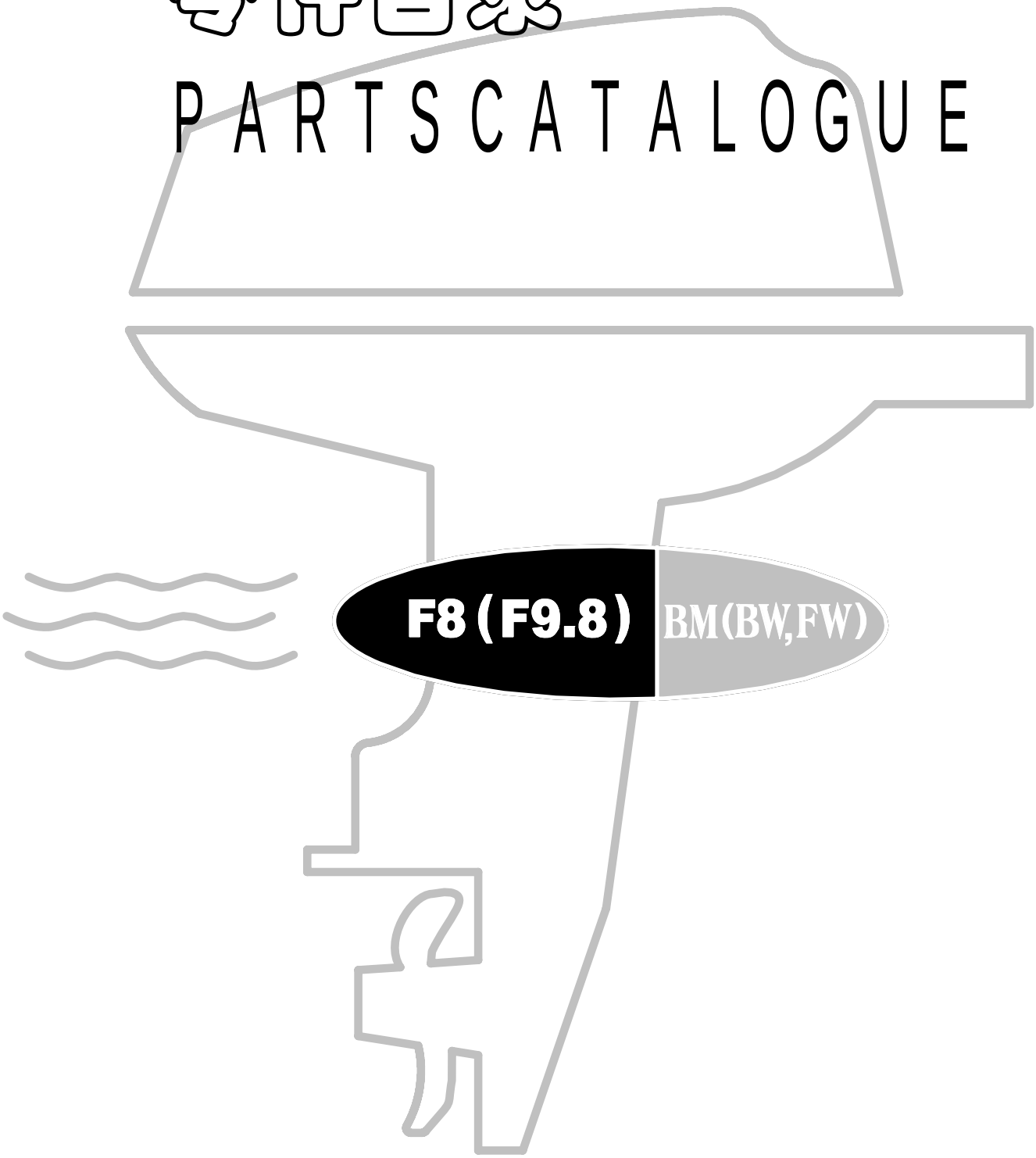

F8 (F9.8) BM(BW,FW)

苏州百胜动力机器股份有限公司

SUZHOU PARSUN POWER MACHINE CO.,LTD

目次
CONTENTS

托架 1 — 1～2
BRACKET 1 — 1～2
托架 2 — 3～4
BRACKET 2 — 3～4
操舵系统 — 5～6
STEERING — 5～6
操纵盒组件 — 7～9
CONTROL BOX ASSY — 7～9
水上装置壳体 — 10～11
UPPER CASING — 10～11
底罩 — 12～13
BOTTOM COWLING — 12～13
控制系统 1 — 14～15
CONTROL SYSTEM 1 — 14～15
控制系统 2 — 16
CONTROL SYSTEM 2 — 16
控制系统 3 — 17
CONTROL SYSTEM 3 — 17
水下装置壳体&驱动系统 — 18～20
LOWER CASING & DRIVE — 18～20
电气 1 — 21～22
ELECTRICAL 1 — 21～22
电气 2 — 23～24
ELECTRICAL 2 — 23～24
进气系统 — 25
INTAKE — 25
气缸头 — 26
CYLINDER HEAD — 26
曲轴&活塞 — 27
CRANKSHAFT & PISTON — 27
曲轴箱 — 28～29
CRANKCASE — 28～29
阀门 — 30
VALVE — 30
凸轮轴 — 31
CAMSHAFT — 31
燃油系统 — 32
FUEL SYSTEM — 32
起动器 — 33～34
STARTER — 33～34
顶罩组件 — 35～36
TOP COWLING ASSY — 35～36

燃油箱 — 37
FUEL TANK — 37
化油器 — 38～39
CARBURETOR — 38～39
气缸头总成(修理件) — 40～41
CYLINDER HEAD ASSY(REPATE KIT) — 40～41
发动机头总成(修理件) — 42～43
ENGINE ASSY (REPARE KIT) — 42～43
附录1(修理件) — 44～45
APPENDIX 1(REPATE KIT) — 44～45
附录2(修理件) — 46～47
APPENDIX 2 (REPARE KIT) — 46～47
零件检索表 — I～III
PARTS CATALOGUE INDEX — I～III

F8(F9.8) 零件手册	PAGE 1 OF 47
零部件名称:	托架
PARTS NAME:	BRACKET

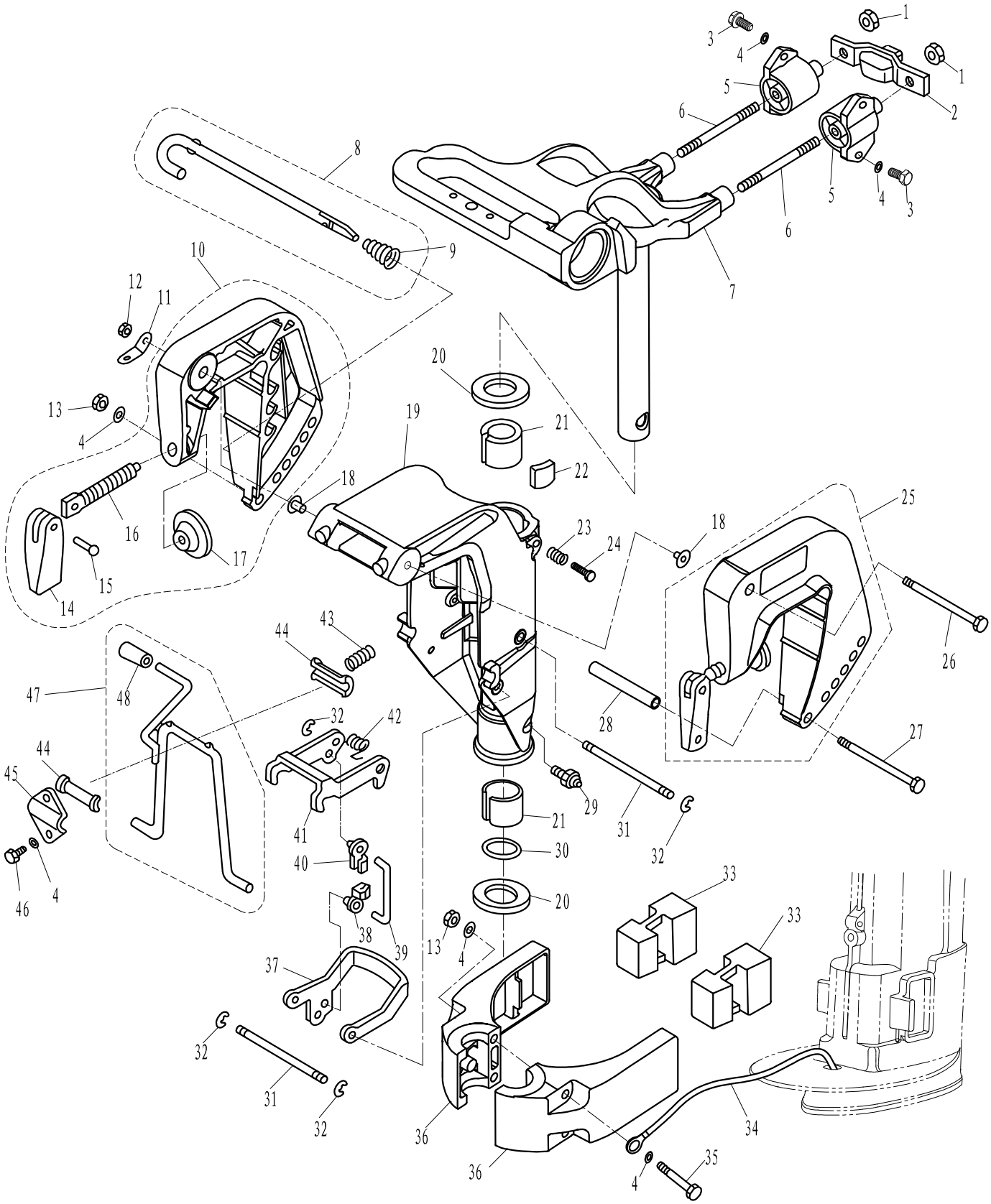

SN. 参照号码	PART NO. 零件编号	DESCRIPTION 零件名称(中文)	DESCRIPTION 零件名称(英文)	QTY 数量					REMARKS 备注
1	GB/T889.1-M8	I 型非金属嵌件六角锁紧螺母 M8	NUT M8	2					
2	F8-00000100	前减震块	FRONT ABSORBER	1					
3	GB/T5783-M6X20	六角螺栓 M6X20	BOLT M6x20	4					
4	GB/T97.1-6	平垫圈 6	WASHER 6	11					
5	F8-02000100	减震器组件	ABSORBER ASSY	2					

零部件名称: 托架

PARTS NAME: BRACKET

SN. 参照号码	PART NO. 零件编号	DESCRIPTION 零件名称(中文)	DESCRIPTION 零件名称(英文)	QTY 数量					REMARKS 备注
6	F8-01000003	双头螺栓 M8X65	DICEPHALOUS BOLT M8X65	2					
7	F8-01020000	操舵托架组件	STEER BRACKET ASSY	1					
8	F8-01010200	角度调整杆组件	THRUST ROD ASSY	1					
9	F4-01050002	锥形弹簧	CONICAL SPRING	1					
10	T6-01010400	夹紧托架（左）组件	BRACKET ASSY (LEFT)	1					
11	F4-01000002	双孔固定板	PLATE, TWO HOLE	1					
12	GB/T889.1-M8	非金属嵌件六角螺母 M8	NUT M8	1					
13	GB/T6170-M6	六角螺母 M6	NUT M6	3					
14	F4-01010004	艉板夹紧手柄	CLAMP HANDLE, STERN	2					
15	F4-01010005	艉板夹紧手柄铆钉	RIVET, CLAMP HANDLE	2					
16	F4-01010002	艉板夹紧螺杆	CLAMP SCREW	2					
17	F4-01010003	艉板夹紧圆盘	CLAMP PAD	2					
18	F4-01000003	尼龙垫圈	WASHER, NYLON	2					
19	F8-01010101	旋转支架	ROTARY BRACKET	1					
20	F8-01000001	旋转支架垫圈	WASHER, ROTARY BRACKET	2					
21	F8-01000002	旋转支架衬套	BUSHING, ROTARY BRACKET	2					
22	F8-01000100	锁紧块组件	LOCKING BLOCK ASSY	1					
23	F8-01010102	锁紧弹簧	SPRING, LOCKING	1					
24	GB/T5783-M8X30	六角螺栓 M8X30	BOLT M8X30	1					
25	T6-01010300	夹紧托架（右）组件	BRACKET ASSY (RIGHT)	1					
26	GB/T5782-M8X140	六角螺栓 M8X140	BOLT M8X140	1					
27	GB/T5782-M6X130	六角螺栓 M6X130	BOLT M6X130	1					
28	F8-01010001	螺栓垫管	TUBE, BOLT	1					
29	JB/T7940.1-M6	直通式压注油杯 M6	OILER M6	1					
30	JASO F404 35-022	O型圈 φ22.4xφ3.5	O-RING φ22.4Xφ3.5	1					
31	F8-01010108	旋转支架销轴	SHAFT, ROTARY BRACKET	2					
32	GB/T896-5	开口挡圈 5	CIRCLIP 5	4					
33	F8-00000002	减震块	ABSORBER	2					
34	T15-02010100	接地钢索 B	TIGHTWIRE B	1					
35	GB/T5782-M6X75	六角螺栓 M6X75	BOLT M6X75	2					
36	F8-00000001	减震块外壳	SHELL, ABSORBER	2					
37	F8-01010106	旋转支架外架	OUTER FRAME, ROTARY BRACKET	1					
38	F8-01010112	外架连杆接头	TIE-IN, CONNCTING ROD	1					
39	F8-01010110	内架连杆	CONNCTING ROD, INNER FRAME	1					
40	F8-01010111	内架连杆接头	TIE-IN, CONNCTING ROD	1					
41	F8-01010107	旋转支架内架	INNER FRAME, ROTARY BRACKET	1					
42	F8-01010109	内架扭簧	SPRING, WREST	1					
43	F8-01010104	支撑架弹簧	SPRING, SUPPORT	1					
44	F8-01010103	支撑架尼龙衬套	BUSHING	2					
45	F8-01010105	支撑架压板	PRESS PLATE	1					
46	GB/T5783-M6X12	六角螺栓 M6X12	BOLT M6X12	2					
47	F8-01010300	角度定位支撑架组件	SUPPORT ASSY	1					
48	F4-01030103	手柄套	HANDLE COVER	1					

零部件名称:	托架 2
PARTS NAME:	BRACKET 2

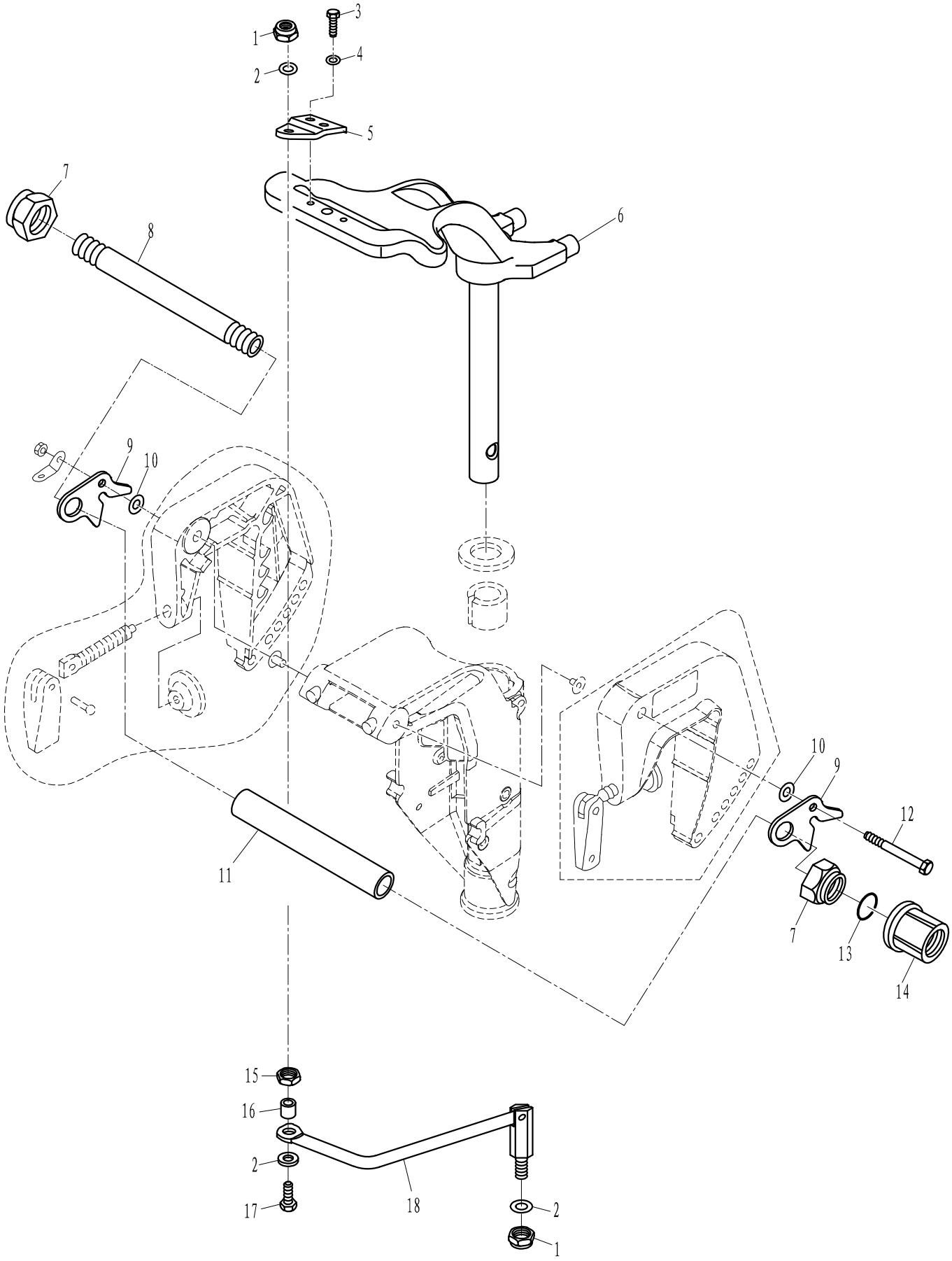

F8 (F9.8)FW 零件手册

零部件名称: 托架 2

PARTS NAME: BRACKET 2

SN. 参照号码	PART NO. 零件编号	DESCRIPTION 零件名称(中文)	DESCRIPTION 零件名称(英文)	QTY 数量					REMARKS 备注
1	F25-07000006W	非金属嵌件六角锁紧薄螺母3/8"	THIN LOCKNUT	2					
2	GB/T97.1-10	平垫圈 10	WASHER 10	3					
3	GB/T5783-M6x20	六角螺栓 M6x20	BOLT M6x20	2					
4	GB/T97.1-6	平垫圈 6	WASHER 6	2					
5	F8-09000701W	转向连接板	PLATE	1					
6	F8-01020000FW	操舵托架组件	STEER BRACKET ASSY	1					
7	F15-01010007	托架夹紧螺母	NUT, SELF-LOCKING	2					
8	E4-07000002W	双头螺管	BOLT , CLAMP BRACKET	1					
9	E4-07000001W	前操支撑板	BRACKET PLATE	2					
10	GB/T96-8	大垫圈 8	BIG WASHER 8	2					
11	F8-09000002W	螺管垫管	TUBE	1					
12	GB/T5782-M8x165	六角螺栓 M8x165	BOLT M8x165	1					
13	JASO F404 24-016	O形密封圈	O-RING	1					
14	F25-01010012W	塑料装饰螺母B	NUT, PLASTIC	1					
15	F25-07000304W	六角螺母3/8"	NUT	1					
16	F25-07000303W	螺栓垫管	TUBE, BOLT	1					
17	E4-07010002W	转向连杆螺栓	BOLT	1					
18	F8-09000700W	转向连杆组件	LINK ROD ASSY	1					

零部件名称:	操舵系统
PARTS NAME:	STEERING

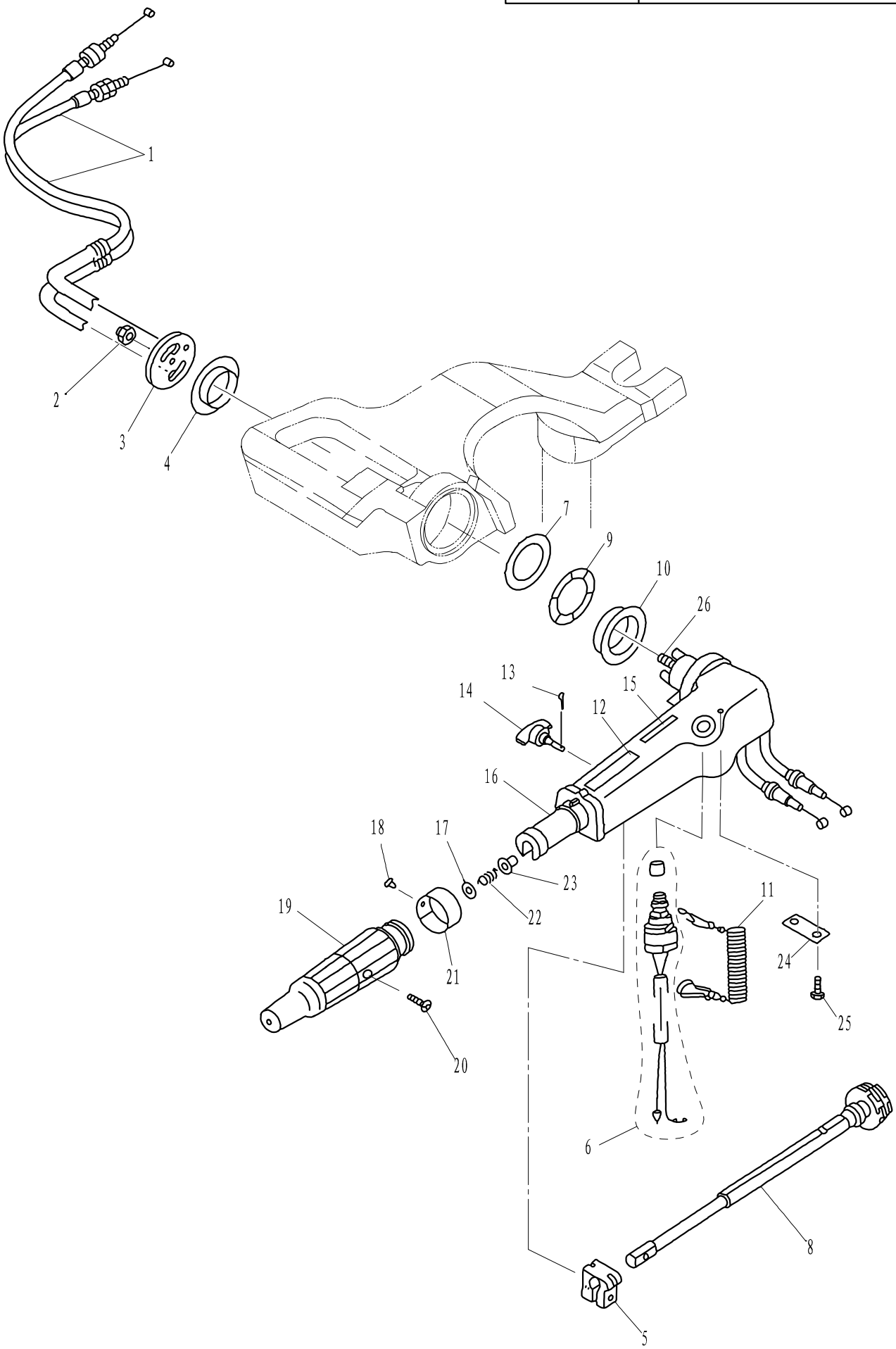

零部件名称: 操舵系统

PARTS NAME: STEERING

SN. 参照号码	PART NO. 零件编号	DESCRIPTION 零件名称(中文)	DESCRIPTION 零件名称(英文)	QTY 数量					REMARKS 备注
1	F8-01030100	油门钢索组件	THROTTLE CABLE ASSY	2					
2	GB/T889.1-M8	I型非金属嵌件六角锁紧螺母M8	LOCKNUT M8	1					
3	T15-01000005	手柄定位盖板	PLATE ,HANDLE ORIENTATION	1					
4	T15-01000004	手柄衬套(低)	BUSH ,HANDLE (LOW)	1					
5	F4-01090003	操舵手柄握把摩擦块	FRICTION	1					
6	T15-01020003	急停开关组件	ENGINE STOP SWITCH ASSY	1					
7	T15-01000003	衬套尼龙垫圈	WASHER ,NYLON	1					
8	F8-01030200	节气门杆组件	LEVER ,THROTTLE ASSY	1					
9	T15-01000002	波形垫圈	WASHER ,WAVE	1					
10	T15-01000001	手柄衬套(高)	BUSH ,HANDLE(HIGH)	1					
11	F4-01090401	引擎停止安全索	STOPER ,HANG ROPE ASSY	1					
12	F4-08000104	标贴4	MARK 4	1					
13	GB/T91-Ø1.6X12	开口销φ1.6×12	PIN ,COTTER	1					
14	F4-01090200	阻力调整旋钮组件	HAND BUTTON ASSY	1					
15	F4-08000105	标贴5	MARK 5	1					
16	T15-01020001	操舵手柄	HANDLE,STEERING	1					
17	GB/T848-10	小垫圈10	SMALL WASHER 10	1					
18	GB/T827-2X5	标牌铆钉2×5	RIVET ,SCUTCHEON	1					
19	F4-01090300	操舵手柄塑胶套组件	STEERING HANDLE ASSY	1					
20	GB/T820-M5X24	十字槽半沉头螺钉M5×24	SCREW M5X24	1					
21	F4-01090303	油门标志牌	INDICATOR,ACCELEROGRAPH	1					
22	F4-01090007	压缩弹簧	SPRING ,COMPRESSION	1					
23	F4-01090006	衬套	BUSH	1					
24	T15-01020002	节气门固定板	STAY	1					
25	GB/T818-M5X12	十字槽盘头螺钉M5X12	SCREW M5X12	2					
26	T15-01020004	双头螺柱M8×25	BOLT,DOUBLE HEAD M8X25	1					

零部件名称:	操纵盒组件
PARTS NAME:	CONTROL BOX ASSY

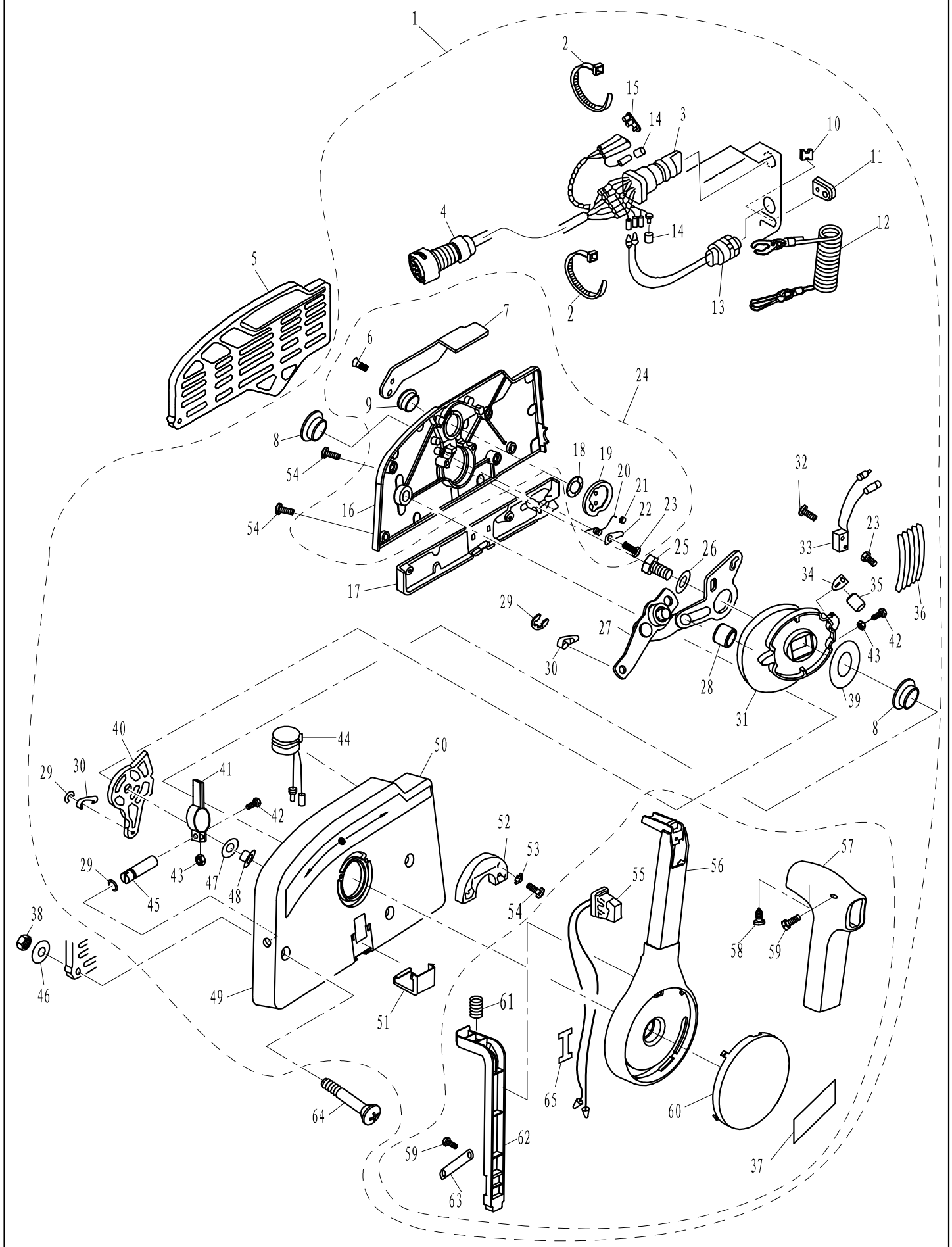

零部件名称: 操纵盒组件

PARTS NAME: CONTROL BOX ASSY

SN. 参照号码	PART NO. 零件编号	DESCRIPTION 零件名称(中文)	DESCRIPTION 零件名称(英文)	QTY 数量					REMARKS 备注
1	F15-13000000W	操纵盒组件	CONTROL BOX ASS'Y	1					
2	HT2.5*60	尼龙扎带	CLAMP	2					
3	F15-13000200W	起动开关组件	STARTING SWICH ASS'Y	1					
4	T85-08010100	操纵线索	CONTROL CABLE	1					
5	F15-11000002W	操纵盒安装板	PLATE ,CONTROL BOX	1					
6	GB/T819.2-M5x12	十字槽沉头螺钉 M5x12	SCREW PAN HEAD M5X12	2					
7	F15-13020007W	油门微调手柄	THROTTLE HANDLE ,INCHING	1					
8	F15-13000005W	凸轮机构衬套	BUSH ,CAM	2					
9	F15-13020006W	微调手柄衬套	BUSH ,HANDLE	1					
10	F15-11000001W	钢索橡胶垫块	BLOCK ,RUBBER	1					
11	F15-13000014W	线索护套	JACKET ,CABLE	1					
12	F4-01090401	引擎停止安全索	STOPER ,HANG ROPE ASS'Y	1					
13	F15-13000400W	急停开关组件	ENGINE STOP SWICH ASS'Y	1					
14	F15-13000203W	绝缘堵头 B	INSULATED PLUG "B"	2					
15	F15-13000202W	绝缘堵头 A	INSULATED PLUG "A"	1					
16	F15-13020001W	操纵盒盖	COVER ,CONTROL BOX	1					
17	F15-13000013W	操纵盒小盖板	SMALL COVER ,CONTROL BOX	1					
18	F15-13020005W	波形垫圈 B	WASHER "B" ,WAVE	1					
19	F15-13020100W	锁紧圆盘组件	LOCKED DISK ASS'Y	1					
20	F15-13020002W	扭簧	TORSION SPRING	1					
21	F15-13020003W	互锁滑轮	EACH LOCKED PULLEY	1					
22	F15-13020004W	滑轮弹簧压板	PLATE ,PULLEY SPRING	1					
23	GB/T818-M4x6	十字槽盘头螺钉M4x6	PAN HEAD SCREW M4X6	2					
24	F15-13020000W	操纵盒盖组件	COVER ASS'Y,CONTROL BOX	1					
25	GB/T5783-M8x30	六角螺栓 M8x30	BOLT M8X30	1					
26	GB/T97.1-8	平垫圈 8	WASHER 8	1					
27	F15-13000500W	油门控制机构	MACHINE ,CONTROL ACCELEROGRAPH	1					
28	F15-13000007W	销轴垫圈	WASHER	1					
29	GB/T896-6	开口挡圈 6	PIN ,COTTER 6	3					
30	F25-07000007W	操控钢索接头 B	CONTROL CABLE TIE_IN "B"	2					
31	F15-13000002W	凸轮机构	CAM MECHANISM	1					
32	GB/T818-M3x14	十字槽盘头螺钉M3x14	PAN HEAD SCREW M3X14	2					
33	F15-13000800W	微动开关	INCHING SWITCH	1					
34	F15-13000003W	档位弹簧片压板	PLATE	1					
35	F15-13000004W	档位滑轮	PULLEY	1					
36	F15-13000001W	档位弹簧片 B	SHIFT SPRING PLATE "B"	5					
37	F15-12000016W	标贴 16	MARK 16	1					
38	GB/T6170-M6	六角螺母 M6	NUT M6	3					
39	F15-13000008W	凸轮机构减磨片	WEARABLE PLATE ,CAM MACHANISM	1					
40	F15-13000700W	变档摆杆	SHIFT SWING LINK	1					
41	F15-13000601W	调节器固定板组件	ADJUSTER FASTNESS ASSY	1					
42	GB/T5783-M5x25	六角螺栓 M5x25	BOLT M5x25	2					
43	GB/T6170-M5	六角螺母 M5	NUT M5	2					

零部件名称: 操纵盒组件

PARTS NAME: CONTROL BOX ASSY

SN. 参照号码	PART NO. 零件编号	DESCRIPTION 零件名称(中文)	DESCRIPTION 零件名称(英文)	QTY 数量					REMARKS 备注
44	F15-13000300W	蜂鸣器组件	BUZZER ASSY	1					
45	F15-13000602W	调节器销轴	ADJUSTER PIN	1					
46	GB/T5287-6	特大垫圈 6	BIG WASHER 6	3					
47	F15-13000006W	摆杆减磨片	WEARABLE PLATE	1					
48	F15-13000011W	变档摆杆衬套	BUSH ,SHIFT SWING LINK	1					
49	F15-13000012W	操纵盒座	BRACKET ,CONTROL BOX	1					
50	F15-12000013W	标贴 13	MARK 13	1					
51	F15-13000015W	防水盖板	COVER ,WATERPROOF	1					
52	F15-13010010W	操纵手柄限位块	BLOCK ,CONTROL HANDLE	1					
53	GB/T956.1-5	锥形锁紧垫圈 5	WASHER ,LOCKED 5	2					
54	GB/T819.2-M5x18	十字槽沉头螺钉 M5x18	SCREW, PAN HEAD M5x18	7					
55	E4-10040100W	起翘开关组件	SWITCH ASSY,TILT	1					
56	F15-13010001W	操纵手柄	CONTROL HANDLE	1					
57	F15-13010002W	操纵手把	CONTROL HANDLEBAR	1					
58	GB/T84.5-ST4.8x12	十字槽盘头自攻螺钉ST4.8×12	SCREW, PAN HEAD ST4.8x12	1					
59	GB/T818-M4x10	十字槽盘头螺钉M4x10	SCREW, PAN HEAD M4X10	3					
60	F15-13010009W	操纵手柄盖	COVER ,CONTROL HANDLE	1					
61	F15-13010005W	压缩弹簧	SPRING ,COMPRESSION	1					
62	F15-13010004W	操纵定位件	PART ,ORIENTATION CONTROL	1					
63	F15-13010008W	定位件压板	PLATE ,ORIENTATION PART	1					
64	GB/T820-M6x90	十字槽半沉头螺钉M6x90	SCREW, PAN HEAD M6x90	3					
65	E4-07020015W	导线防擦板	CHAFING PLATE,WIRE	1					

零部件名称:	水上装置壳体
PARTS NAME:	UPPER CASING

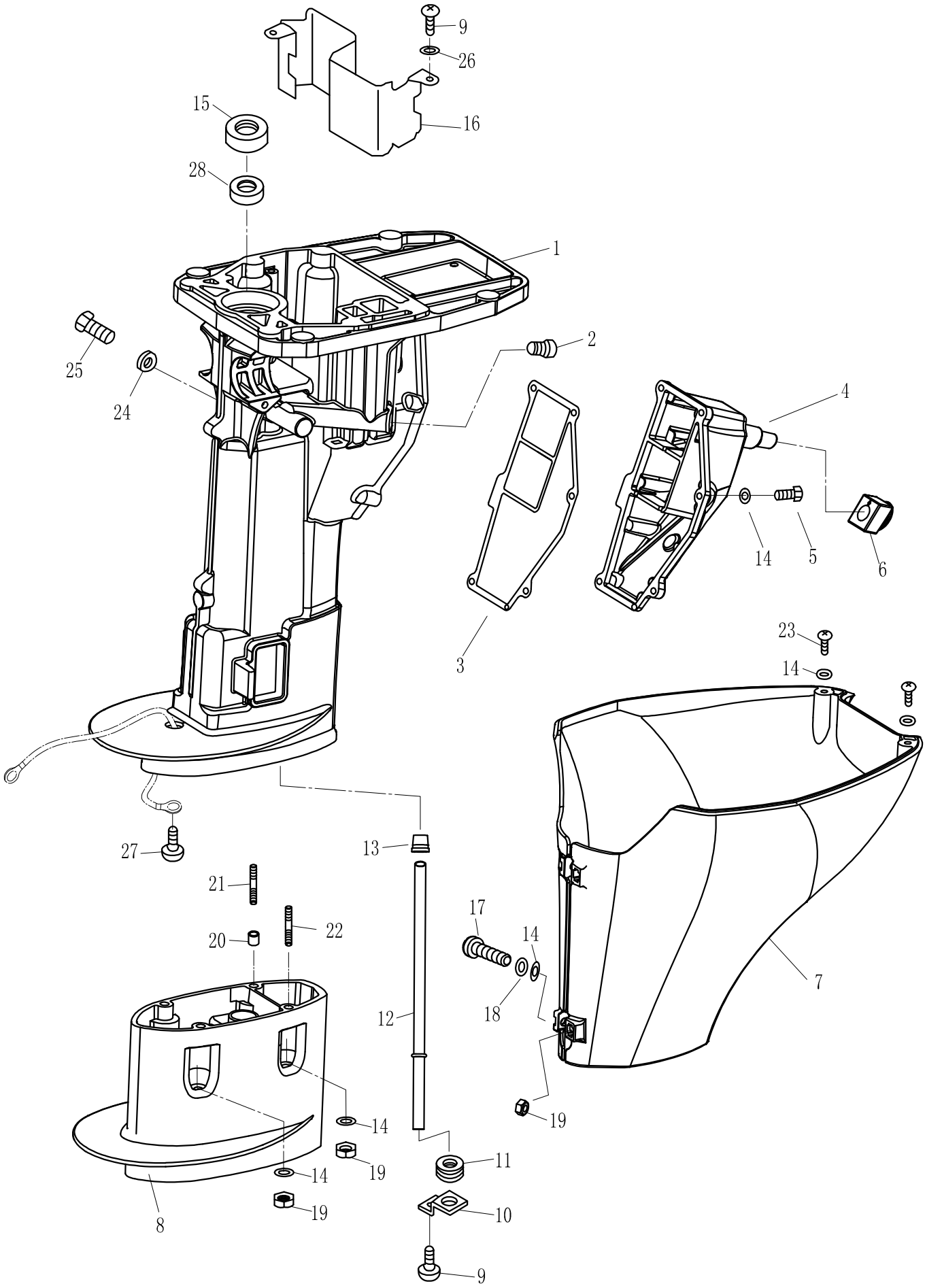

零部件名称: 水上装置壳体

PARTS NAME: UPPER CASING

SN. 参照号码	PART NO. 零件编号	DESCRIPTION 零件名称(中文)	DESCRIPTION 零件名称(英文)	QTY 数量					REMARKS 备注
1	F8-02000001	水上装置壳体	UPPER CASING	1					
2	F15-07010004	堵头 1/8"	JAM 1/8"	3					
3	F8-02000004	排气盖板密封垫	GASKET, EXHAUST OUTER COVER	1					
4	F8-02000005	排气盖板	EXHAUST OUTER COVER	1					
5	GB/T5783-M6X20	六角螺栓 M6×20	HEXAGON BOLL M6X20	6					
6	F8-02000010	排气盖板护套	JACKET , EXHAUST OVER COVER	1					
7	F8-00000006	水上装置罩壳	MANTLE, UPPER CASING	1					
8	F8-02010001	接长体	EXTENSION	1					L
9	GB/T818-M5X10	十字槽盘头螺钉 M5×10	BOLT M5X10	3					
10	F8-02000009	水管固定架	ALATE, WATER PIPE	1					
11	F8-02000008	水管下密封圈	SEAL, WATER PIPE	1					
12	F8-02000006(L)	水管(L)	WATER PIPE(L)	1					L
	F8-02000006(S)	水管(S)	WATER PIPE(S)	1					S
13	F8-02000007	水管上密封圈	UPPER SEAL, WATER PIPE	1					
14	GB/T97.1-6	平垫圈 6	WASHER 6	14					
15	F8-02000002	驱动轴油封12.1X28X5	OIL SEAL, DRIVE SHAFT	1					
16	F8-02000003	油底壳隔板	CLAPBOARD, OIL SUMP	1					
17	GB/T818- M6×30	十字槽盘头螺钉 M6×30	SCREW, PAN HEAD M6X30	2					
18	GB/T93-6	弹性垫圈 6	SPRING WASHER 6	2					
19	GB/T6170-M6	六角螺母 M6	NUT, HEXAGON M6	6					
20	F8-00000005	空心定位销	PIN, DOWEL	2					L
21	F8-02000011	双头螺栓 M6x23	BOLT M6x23	2					L
22	F8-02000012	双头螺栓 M6x28	BOLT M6x28	2					L
23	GB/T818-M6X16	十字槽盘头螺钉M6X16	SCREW M6X16	2					
24	F15-04000003	放油螺栓垫圈	GASKET	1					
25	F15-04000002	放油螺栓	BOLT, OIL DRAIN	1					
26	GB/T93-5	弹性垫圈 5	SPRING WASHER 5	2					
27	GB/T818- M6×8	十字槽盘头螺钉 M6×8	SCREW, PAN HEAD M6X8	1					
28	F8-02000013	导向套	GUIDE SLEEVE	1					

零部件名称:	底罩
PARTS NAME:	BOTTOM COWLING

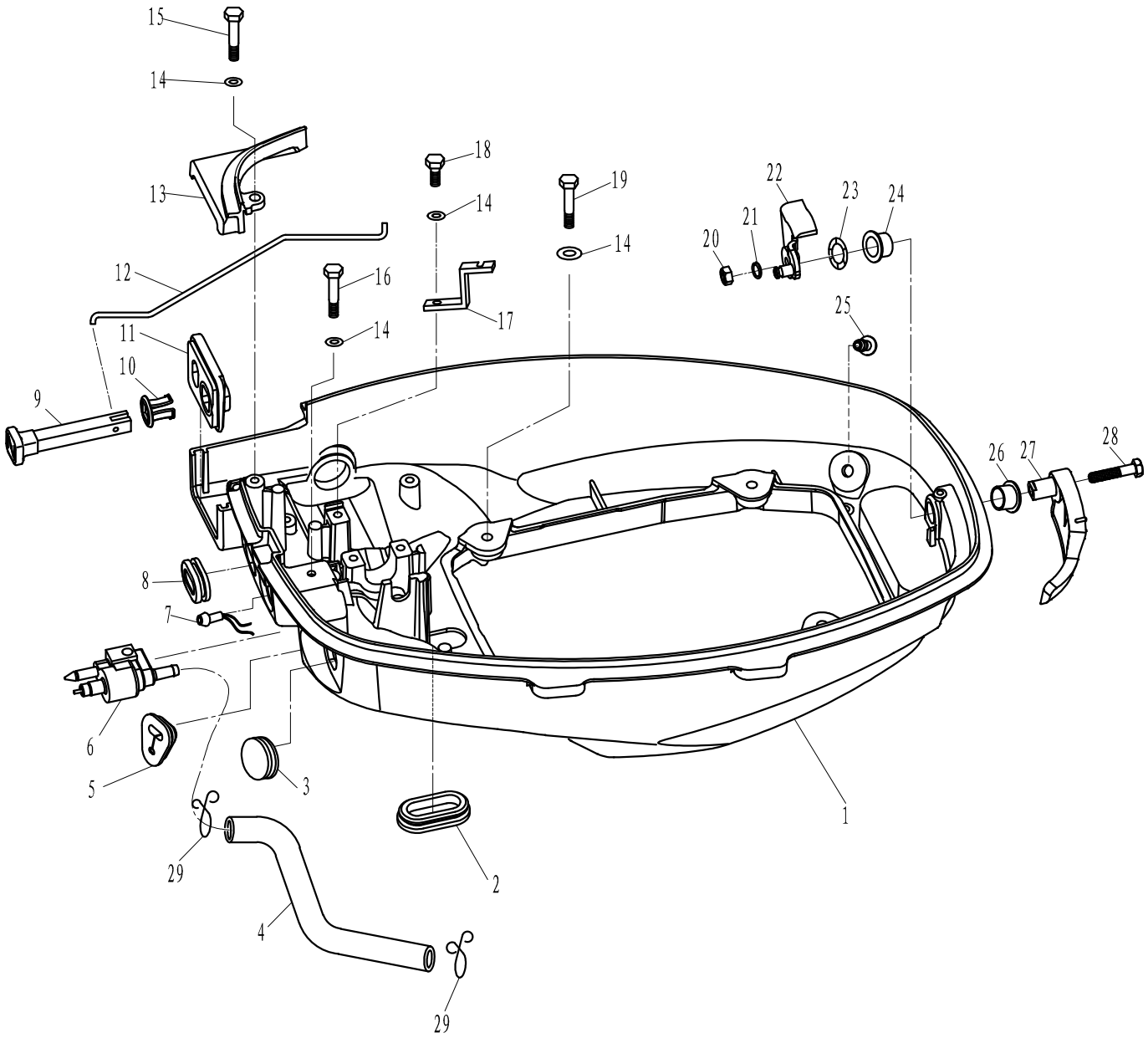

零部件名称: 底罩

PARTS NAME: BOTTOM COWLING

SN. 参照号码	PART NO. 零件编号	DESCRIPTION 零件名称(中文)	DESCRIPTION 零件名称(英文)	QTY 数量					REMARKS 备注
1	F8-03000001	底罩	BOTTOM COWLING	1					
2	F8-03000004	环形橡胶堵头B	RUBBER PLUG B	2					
3	F25-03000003	圆形橡胶闷头	CIRCULAR PLUG	1					
4	F8-03000002	燃油管 Φ10XΦ5X180	FUEL PIPE	1					
5	F15-01000015	油门钢索护套	JACKET, CABLE	1					
6	F4-05000200	燃油管接头组件	FUEL CONNECTOR ASSY	1					
7	F15-07130303	机油指示灯组件	INDICATOR LIGHT ASSY	1					
8	F8-03000003	环形橡胶堵头A	RUBBER PLUG A	1					
9	F8-03000202	阻风门手柄	HANDLE, AIR CHOKE	1					
10	F8-03000007	阻风门导向套	BUSH, AIR CHOKE	1					
11	F8-03000008	阻风门橡胶固定板	RUBBER PLATE, AIR CHOKE	1					
12	F8-03000201	阻风门钢丝	STEEL WIRE, AIR CHOKE	1					
13	F8-03000014	底罩小盖板	COVER BOARD, BOTTOM COWLING	1					
14	GB/T97.1-6	平垫圈 6	WASHER 6	7					
15	GB/T5783-M6X16	六角螺栓 M6X16	BOLT, HEXAGON M6X16	1					
16	GB/T5783-M6X20	六角螺栓 M6X20	BOLT, HEXAGON M6X20	1					
17	F8-03010008	制动器钢索固定架	PLATE, TIGHTWIRE	1					
18	GB/T5783-M6X12	六角螺栓 M6X12	BOLT, HEXAGON M6X12	1					
19	GB/T5783-M6X25	六角螺栓 M6X25	BOLT, HEXAGON M6X25	4					
20	GB/T6170-M6	六角螺母 M6	NUT 6	1					
21	GB/T93-6	弹性垫圈 6	SPRING-WASHER 6	1					
22	F15-05030000	顶罩锁紧块组件	LOCKING ASSY, TOP COWLING	1					
23	F15-05000023	波形垫圈	WASHER, WAVE	1					
24	T15-03000012	顶罩锁紧手柄尼龙衬套B	BUSHING B	1					
25	F8-03000012	出水嘴	NIPPLE	1					
26	T15-03000008	顶罩锁紧手柄尼龙衬套A	BUSHING A	1					
27	F8-03020000	顶罩锁紧手柄	LOCKING HANDLE, TOP COWLING	1					
28	GB/T5783-M6X25	六角螺栓 M6X25	BOLT, HEXAGON M6X25	1					
29	F4-04000030	油管夹簧B	SPRING, FUEL PIPE "B"	2					

零部件名称:	控制系统 1
PARTS NAME:	CONTROL SYSTEM 1

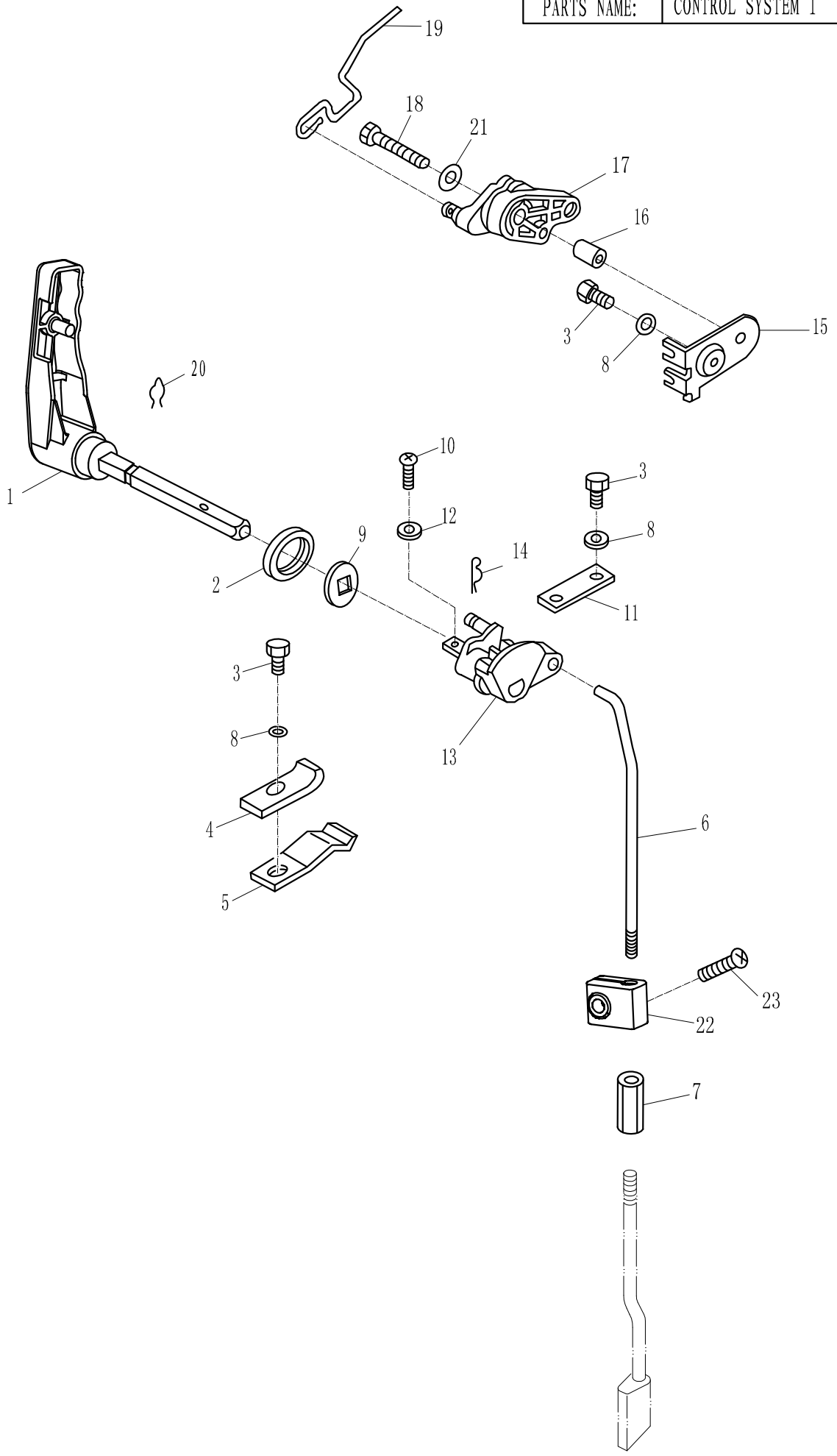

零部件名称: 控制系统 1

PARTS NAME: CONTROL SYSTEM 1

SN. 参照号码	PART NO. 零件编号	DESCRIPTION 零件名称(中文)	DESCRIPTION 零件名称(英文)	QTY 数量					REMARKS 备注
1	F8-03010100	变档手柄组件	HANDLE, GEAR SHIFT	1					
2	F8-03010001	变档手柄衬圈	WASHER, HANDLE	1					
3	GB/T5783-M6X12	六角螺栓M6X12	BOLT, HEXAGON M6X12	4					
4	F8-03010006	档位弹簧片压板	PLATE, SHIFTLEVER STOPPER	1					
5	F8-03010005	档位弹簧片	STOPPER, SHIFT LEVER	1					
6	F8-03000010	变档连接杆	SHIFT ROD	1					
7	F8-03000013	柱状螺母	COLUMNED NUT	1					
8	GB/T97.1-6	平垫圈6	WASHER 6	4					
9	F8-03010002	变档手柄垫圈	WASHER	1					
10	GB/T818-M4X14	十字槽盘头螺钉M4X14	SCREW M4X14	1					
11	F8-03010007	档位块压板	PLATE	1					
12	GB/T97.1-4	平垫圈4	WASHER 4	1					
13	F8-03010003	变档档位块	BLOCK, SHIFT ROD	1					
14	F15-00000012	夹簧 ∅1.8	SPRING ∅1.8	1					
15	F8-05000020	油门执行器固定板	PLATE, ACCELEROGRAPH ENFOPCE	1					
16	F8-05000018	油门执行器衬管	BUSH, ACCELEROGRAPH ENFOPCE	1					
17	F8-05000019	油门执行器主动滑轮	MAIN PULLEY	1					
18	GB/T5783-M6X30	六角螺栓M6X30	BOLT, HEXAGON M6X30	1					
19	F8-05000010	油门控制连杆	LINK, ACCELEROGRAPH CONTROL	1					
20	F8-03000005	钢丝夹簧 ∅1.2	SPRING ∅1.2	1					
21	GB/T96-6	大垫圈6	WASHER 6	1					
22	F8-03000011	倒档锁紧块	LOCK BLOCK, REVERSE GEAR	1					
23	GB/T823-M6x10	十字槽小盘头螺钉 M6x10	BOLT M6x10	1					

零部件名称:	控制系统 2
PARTS NAME:	CONTROL SYSTEM 2

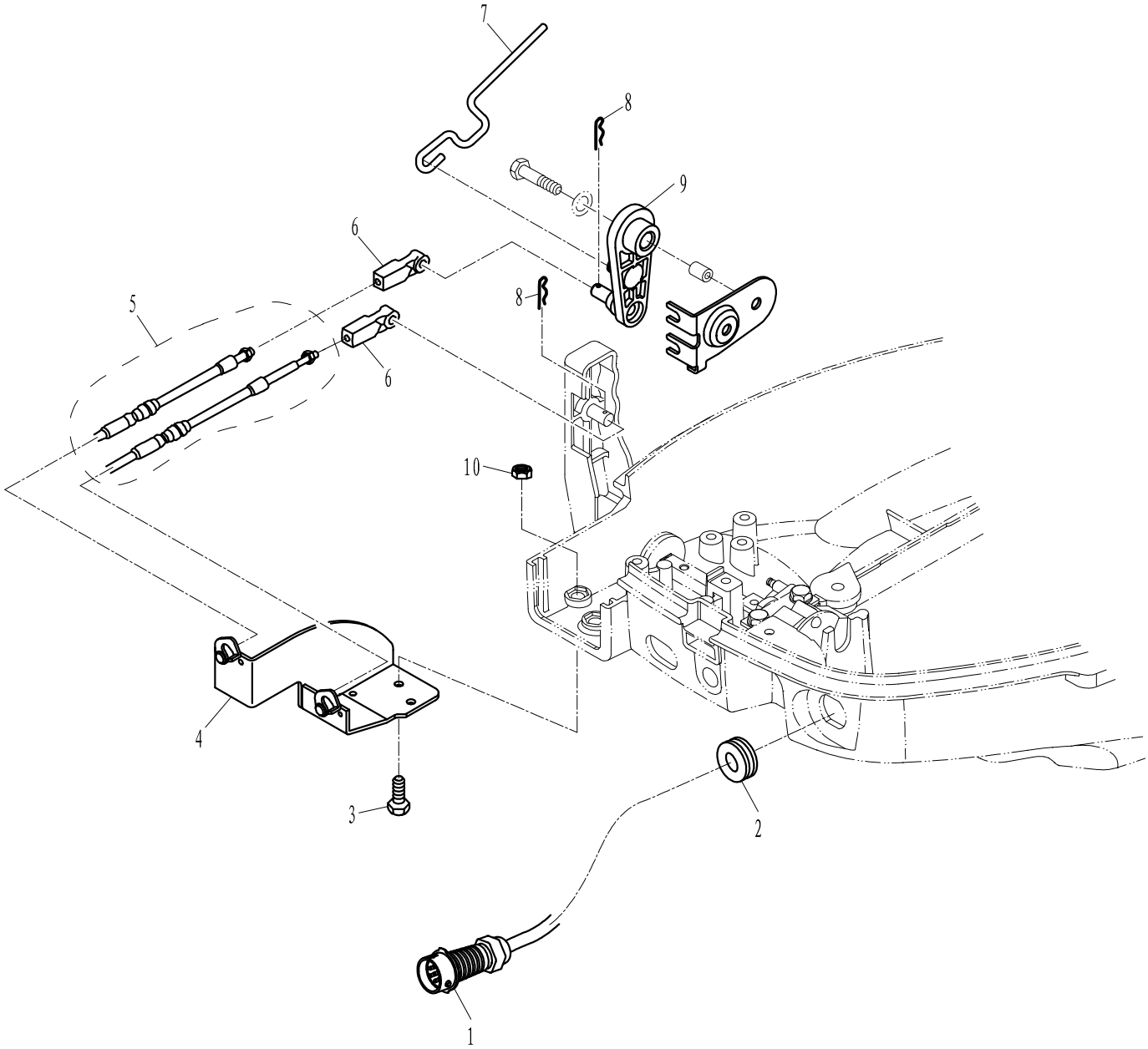

SN. 参照号码	PART NO. 零件编号	DESCRIPTION 零件名称(中文)	DESCRIPTION 零件名称(英文)	QTY 数量					REMARKS 备注
1	F8-05090100W	点火线索（7芯导线）	C.D.I CABLE	1					
2	F8-03000015FW	堵塞	JAM	1					
3	GB/T5783-M6x16	六角螺栓 M6x16	BOLT M6x16	2					
4	F8-09000200W	钢索固定架组件	CABLE BRACKET ASSY	1					
5	F25-07000200W	操控钢索组件	CONTROL CABLE ASSY	2					
6	F25-07000005W	操控钢索接头A	TIE-IN A,CONTROL CABLE	2					
7	F8-09000001W	油门控制连杆B	LINK B,ACCELEROGRAPH	1					
8	F15-00000012	夹簧 Φ1.8	CIRCLIP Φ1.8	2					
9	F8-09000100W	摇臂	ROCKER	1					
10	GB/T6170-M6	六角螺母 M6	NUT M6	2					

零部件名称:	控制系统 3
PARTS NAME:	CONTROL SYSTEM 3

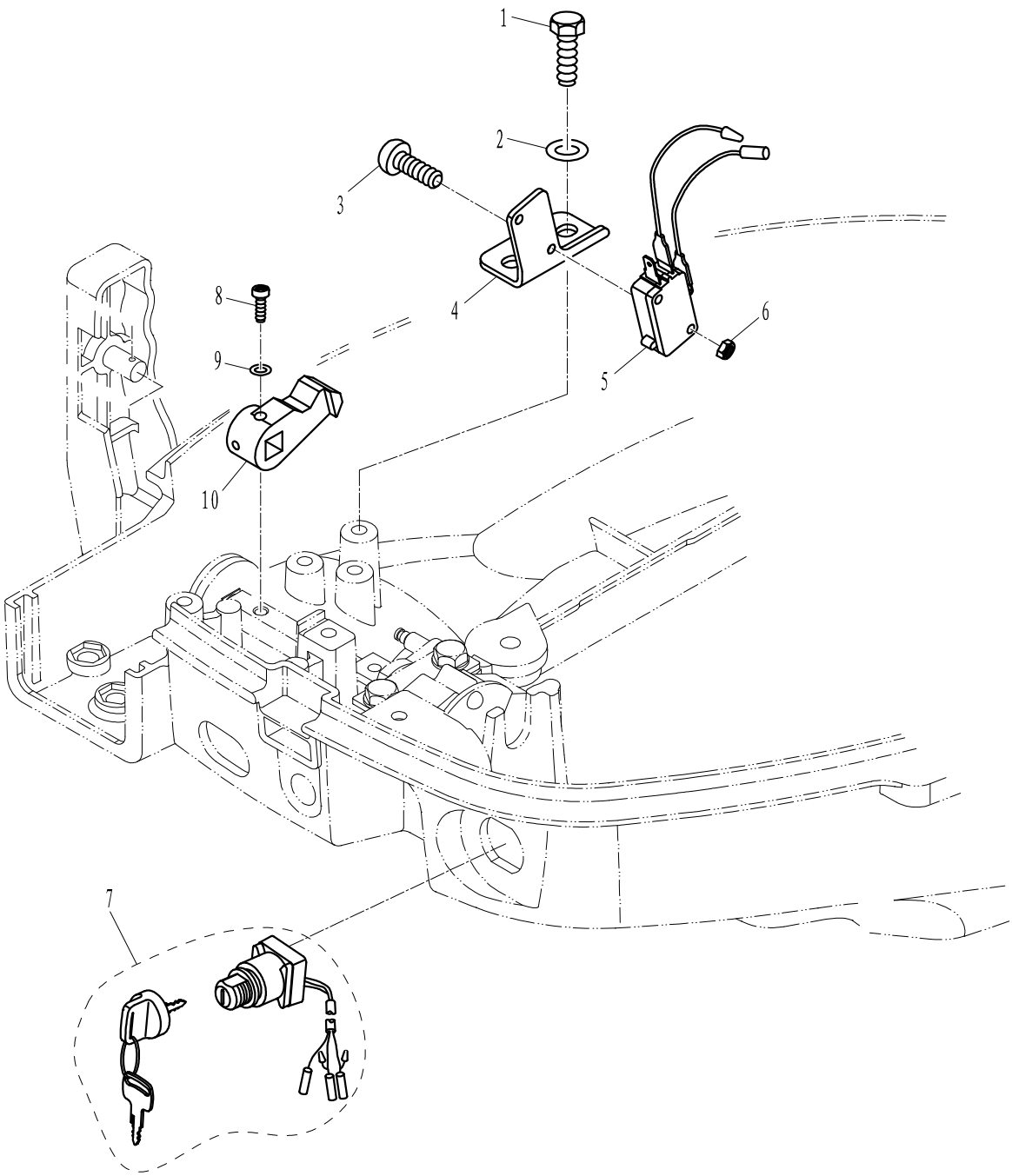

SN. 参照号码	PART NO. 零件编号	DESCRIPTION 零件名称(中文)	DESCRIPTION 零件名称(英文)	QTY 数量					REMARKS 备注
1	GB/T5783-M6x16	六角螺栓 M6x16	BOLT M6x16	2					
2	GB/T97.1-6	平垫圈 6	WASHER 6	2					
3	GB/T818-M3x14	十字槽盘头螺钉 M3x14	SCREW M3x14	2					
4	F8-03000021BW	微动开关固定板	PLATE, INCHING SWITCH	1					
5	F15-13000800W	微动开关(KW7-0)	INCHING SWITCH	1					
6	GB/T6170-M3	六角螺母 M3	NUT M3	2					
7	F8-03000300BW	启动开关组件	STARTUP SWITCH ASSY	1					
8	GB/T818-M4x12	十字槽盘头螺钉 M4x12	SCREW Mx12	1					
9	GB/T97.1-4	平垫圈 4	WASHER 4	1					
10	F25-03030005BW	制动器摇臂 C	ROCKER C, ARRESTER	1					

零部件名称:	水下装置壳体&驱动系统
PARTS NAME:	LOWER CASING & DRIVE

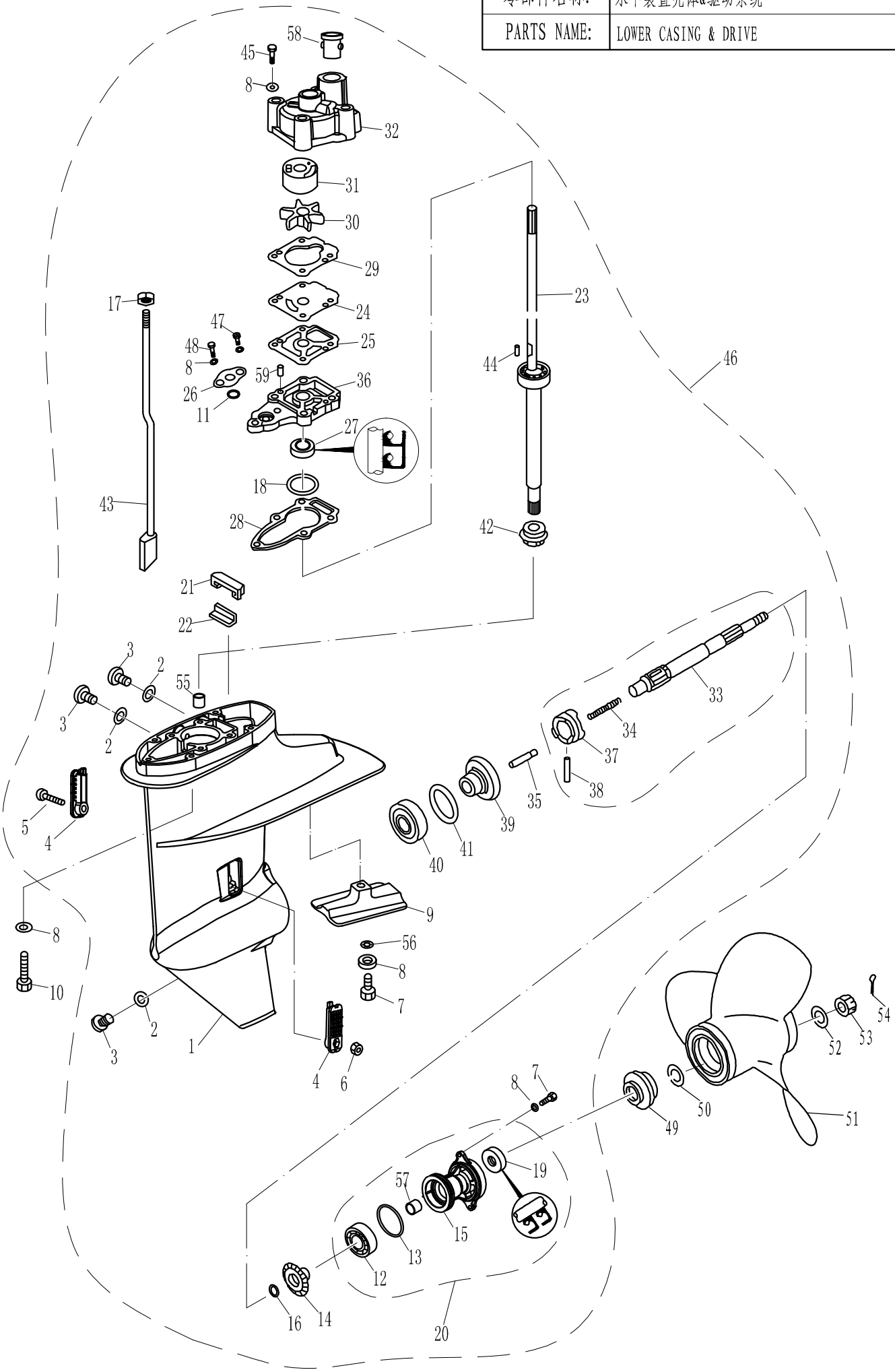

零部件名称: 水下装置壳体&驱动系统

PARTS NAME: LOWER CASING & DRIVE

SN. 参照号码	PART NO. 零件编号	DESCRIPTION 零件名称(中文)	DESCRIPTION 零件名称(英文)	QTY 数量					REMARKS 备注
1	F8-04000001	水下装置壳体	LOWER CASING	1					
2	F4-03000024	注油孔螺栓密封垫	GASKET	3					
3	F4-03000023	注油孔螺栓	PLUG, OIL HOSE	3					
4	F8-04000017	进水口	WATER INLET	2					
5	GB/T823-M4X25	十字槽小盘头螺钉 M4X25	SCREW M4X25	1					
6	GB/T889.1-M4	六角锁紧螺母 M4	NUT, HEXAGON M4	1					
7	GB/T5783-M6X25	六角螺栓 M6X25	BOLT, HEXAGON M6X25	3					
8	GB/T97.1-6	平垫圈6	WASHER 6	11					
9	F8-04000018	水下阳极	ANODE	1					
10	GB/T5783-M6X35	六角螺栓 M6X35	BOLT, HEXAGON M6X35	4					
11	F2.6-03000009	O形密封圈	O-RING	1					
12	GB/T276-6004	深沟球轴承6004	BEARING 6004	1					
13	F8-04040002	水下壳盖O形圈	O-RING	1					
14	F8-04000014	倒档齿轮	GEAR, REVERSE	1					
15	F8-04040001	水下壳体盖	COVER, LOWER CASING	1					
16	F8-04000012	倒档齿轮垫圈	WASHER	1					
17	GB/T6170-M5	六角螺母 M5	NUT, HEXAGON M5	1					
18	F8-04000004-1	驱动轴填隙片 0.10mm	SHIM 0.10mm						
	F8-04000004-2	驱动轴填隙片 0.15mm	SHIM 0.15mm						
	F8-04000004-3	驱动轴填隙片 0.20mm	SHIM 0.20mm						
19	F8-04040004	螺旋桨轴油封15X28X10	OIL SEAL	1					
20	F8-04040000	水下装置壳体盖组件	COVER ASSY, LOWER CASING	1					
21	F8-04000016	水封密封垫	GASKET, WATER SEAL	1					
22	F8-04000015	水封	WATER SEAL	1					
23	F8-04020001(L)	驱动轴组件(L)	DRIVE SHAFT ASSY(L)	1					L
	F8-04020001(S)	驱动轴组件(S)	DRIVE SHAFT ASSY(S)	1					S
24	F8-04000007	外挡板	OUTER PLATE	1					
25	F8-04000006	外挡板下密封垫	GASKET, OUTER PLATE	1					
26	F8-04000011	O形圈挡板	PLATE, O-RING	1					
27	F8-04000101	水泵座油封 12.1X24X8	OIL SEAL	1					
28	F8-04000005	水泵座密封垫	GASKET, WATER PUMP SEAT	1					
29	F8-04000008	外挡板上密封垫	GASKET, OUTER PLATE	1					
30	F8-04000200	水泵叶轮	IMPELLER	1					
31	F8-04000010	水泵内壳	INNER SHELL, WATER PUMP	1					
32	F8-04000009	水泵壳体	WATER PUMP	1					
33	F8-04000301	螺旋桨轴	SHAFT, PROPELLER	1					
34	F8-04000302	离合器弹簧	SPRING, CLUTCH	1					
35	F8-04000305	离合器销	PIN, CLUTCH	1					
36	F8-04000102	水泵座	WATER PUMP SEAT	1					
37	F8-04000303	爪形离合器	CLUTCH, DOG	1					
38	GB/T879.1-3.5X28	重型直槽弹性圆柱销 3.5X28	PIN 3.5X28	1					
39	F8-04010000	正档齿轮组件	GEAR, FORWARD	1					
40	GB/T276-6204	深沟球轴承 6204	BEARING 6204	1					

零部件名称: 水下装置壳体&驱动系统

PARTS NAME: LOWER CASING & DRIVE

SN. 参照号码	PART NO. 零件编号	DESCRIPTION 零件名称(中文)	DESCRIPTION 零件名称(英文)	QTY 数量					REMARKS 备注
41	F8-04000002-1	正档齿轮填隙片 0.10mm	SHIM 0.10mm						
	F8-04000002-2	正档齿轮填隙片 0.15mm	SHIM 0.15mm						
42	F8-04000003	小齿轮	PINION	1					
43	F8-04030000L	变档凸轮轴组件(L)	CAM ASSY, SHIFT ROD(L)	1					L
	F8-04030000S	变档凸轮轴组件(S)	CAM ASSY, SHIFT ROD(S)	1					S
44	F8-04000021	叶轮定位销	PIN, DOWER	1					
45	GB/T5783-M6X50	六角螺栓 M6X50	BOLT, HEXAGON M6X50	4					
46	F8-04000000L	水下装置壳体总成(L)	LOWER CASING ASSY(L)	1					L
	F8-04000000S	水下装置壳体总成(S)	LOWER CASING ASSY(S)	1					S
47	GB/T818-M5X6	十字槽盘头螺钉 M5X6	SCREW M5X6	1					
48	GB/T5783-M6X25	六角螺栓 M6X25	BOLT, HEXAGON M6X25	1					
49	F8-04000019	螺旋桨轴垫块	CUSHION, PROPELLER	1					
50	F8-04000020	螺旋桨轴垫片	WASHER, PROPELLER SHAFT	1					
51	F8-04050000	螺旋桨组件	PROPELLER ASSY	1					
52	GB/T96-10	大垫圈 10	WASHER 10	1					
53	F15-06000016	开槽六角螺母	NUT, HEXAGON	1					
54	GB/T91-Ø2.5X20	开口销 Ø2.5×20	PIN, COTTER	1					
55	NSK FJ-1516	滚针轴承	BEARING	1					
56	GB/T861.1-6	内齿锁紧垫圈6	LOCK WASHER 6	1					
57	F8-04040003	筒形轴承	BEARING	1					
58	F8-04000013	水管导向套	SEAL	1					

零部件名称:	电气 1
PARTS NAME:	ELECTRICAL 1

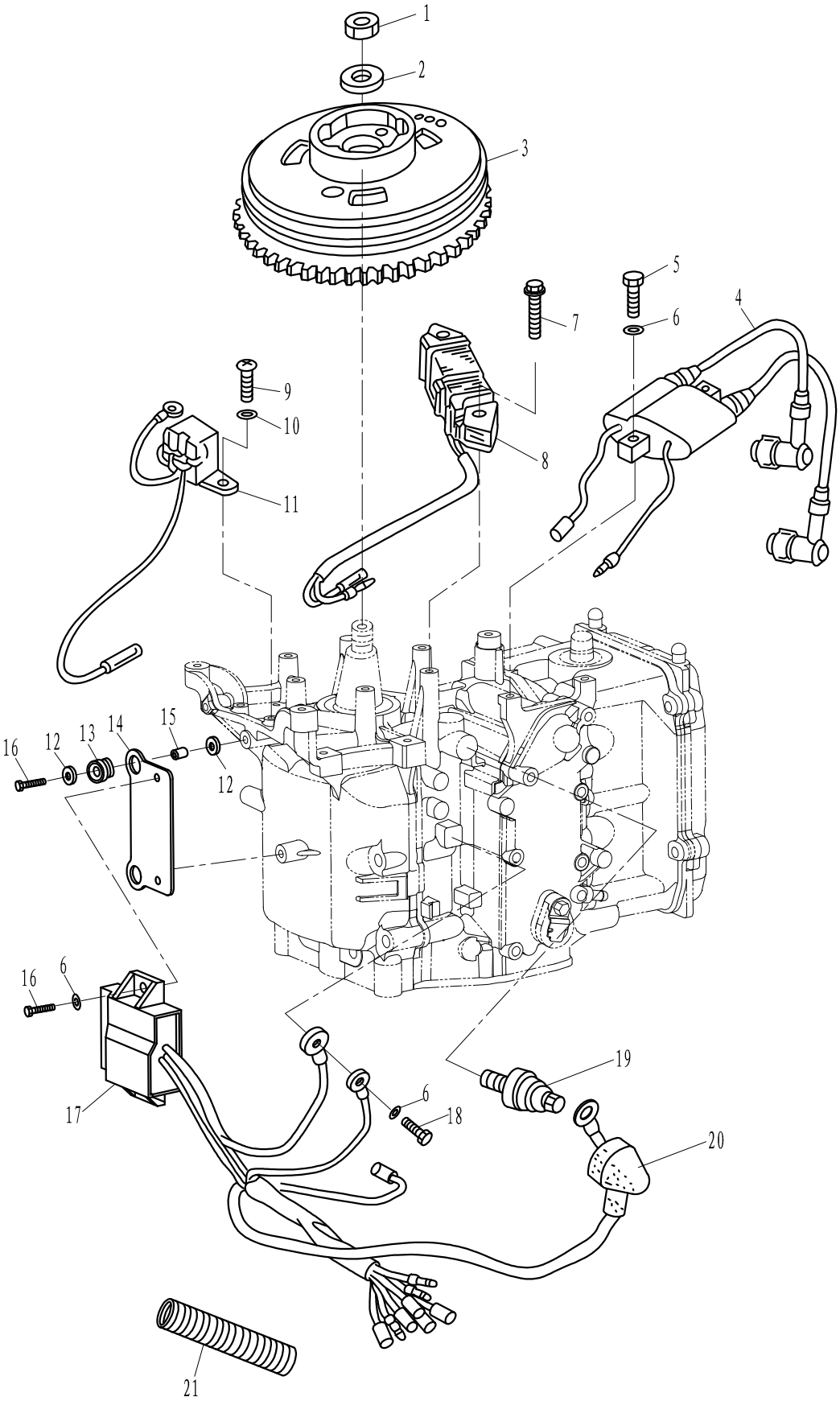

零部件名称: 电气 1

PARTS NAME: ELECTRICAL 1

SN. 参照号码	PART NO. 零件编号	DESCRIPTION 零件名称(中文)	DESCRIPTION 零件名称(英文)	QTY 数量					REMARKS 备注
1	F8-05000024	飞轮螺母	NUT, FLYWHEEL	1					
2	T15-04000011	飞轮螺母垫圈	WASHER, FLYWHEEL NUT	1					
3	F8-05000600	飞轮组件	FLYWHEEL ASSY	1					
4	F8-05000500	高压包组件	HIGH PRESSURE ASSY	1					
5	GB/T5783-M6x25	六角螺栓 M6x25	BOLT M6x25	2					
6	GB/T97.1-6	平垫圈 6	WASHER 6	5					
7	GB/T5787-M6x30	六角法兰螺栓 M6x30	BOLT M6x30	2					
8	F8-05000300	磁电机线圈组件	COIL	1					
9	GB/T818-M5x10	十字槽盘头螺钉 M5x10	BOLT M5x10	2					
10	GB/T97.1-5	平垫圈 5	WASHER 5	2					
11	F8-05000200	触发线圈组件	COIL, PULSER	1					
12	F8-05000021	大垫片	WASHER	4					
13	F8-05000007	点火模块减震圈	ABSORBER , C.D.I	2					
14	F8-05000005	点火模块固定板	PLATE, C.D.I	1					
15	F8-05000006	垫管	TUBE	2					
16	GB/T5783-M6x16	六角螺栓 M6x16	BOLT M6x16	4					
17	F8-05000400	点火控制模块	C.D.I UNIT ASSY	1					
18	GB/T5783-M6x12	六角螺栓 M6x12	BOLT M6x12	1					
19	F15-07010103	机油压力传感器	OIL PRESSURE SENSOR	1					
20	F15-07010101	绝缘护套	JACKET, INSULATION	1					
21	F15-07000003	波纹管Φ27xΦ22.5	RIPPLE TUBE	1					

零部件名称:	电气 2
PARTS NAME:	ELECTRICAL 2

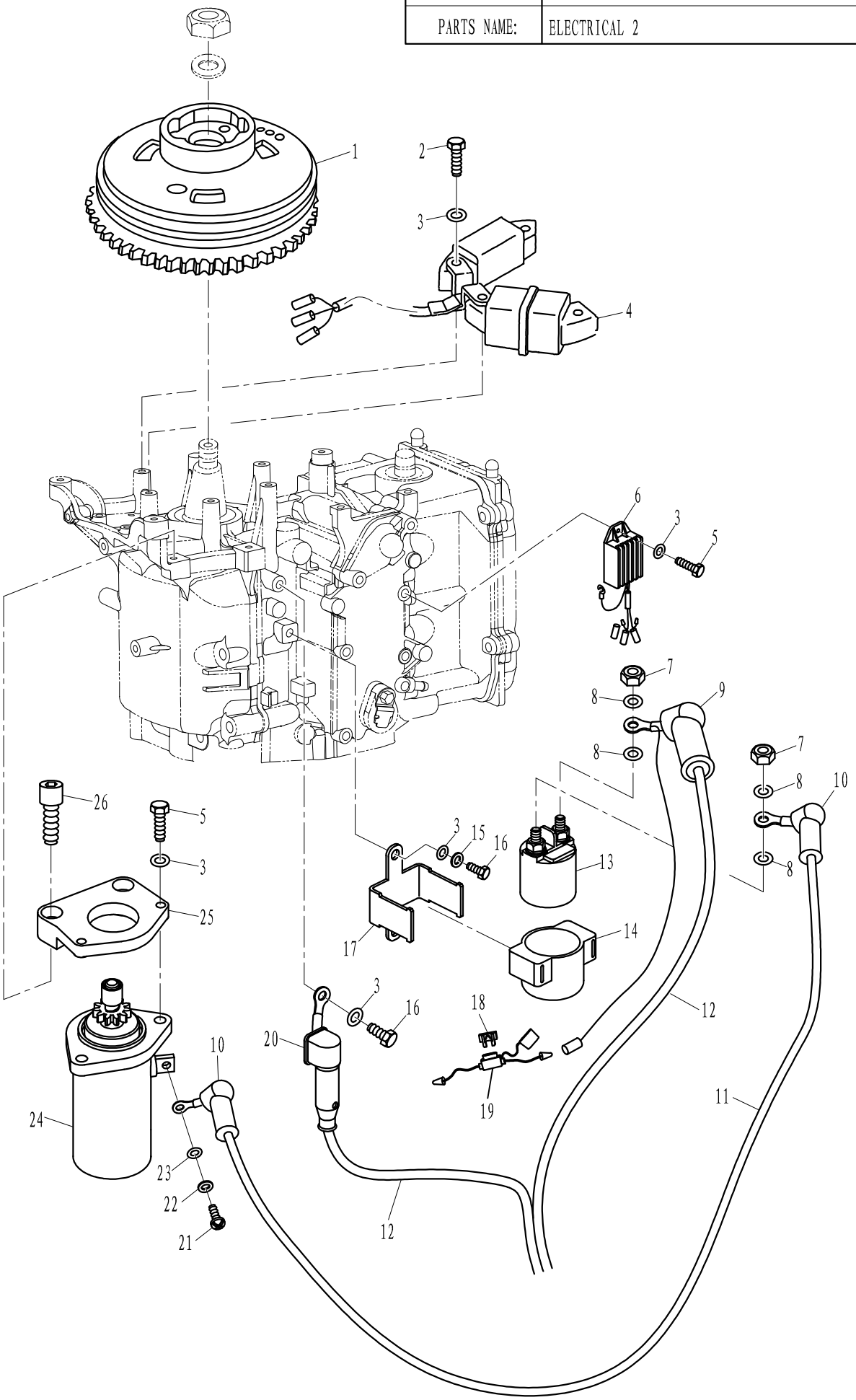

零部件名称: 电气 2

PARTS NAME: ELECTRICAL 2

SN. 参照号码	PART NO. 零件编号	DESCRIPTION 零件名称(中文)	DESCRIPTION 零件名称(英文)	QTY 数量					REMARKS 备注
1	F8-09000600W	飞轮组件	FLYWHEEL ASSY	1					
2	GB/T5783-M6x30	六角螺栓 M6x30	BOLT M6X30	4					
3	GB/T97.1-6	平垫圈 6	WASHER 6	9					
4	F8-05090000W	照明线圈	COIL	1					
5	GB/T5783-M6x25	六角头螺栓 M6x25	BOLT M6x25	3					
6	F15-07060001	整流器组件	RECTIFIER & REGULATOR ASSY	1					
7	GB/T6170-M6	六角铜螺母M6	NUT M6	2					HSn62-1
8	GB/T97.1-6	平垫圈 6	WASHER 6	4					HSn62-1
9	F25-05170202W	电源连接线护套B	COVERING B,POWER SOURCE LINE	1					
10	F25-05170401W	电机连接线护套	JACKET,CONNECTION LINE	2					
11	F8-05090200W	电机连接线	CONNECTION LINE, MOTOR	1					
12	F15-07150200W	电源连接线	LINE, POWER SOURCE	1					
13	F15-07150300W	启动电机继电器	RELAY	1					
14	F15-07150301W	继电器护套	JACKET,RELAY	1					
15	GB/T93-6	弹簧垫圈 6	SPRING WASHER 6	1					
16	GB/T5783-M6x16	六角螺栓 M6x16	BOLT M6x16	2					
17	F25-07150302W	继电器固定板	PLANK,RELAY	1					
18	F8-05000027W	保险丝15A	FUSE	1					
19	F25-05090100W	熔断器组件（JEF-709J）	FUSE ASSY	1					
20	F25-05170201W	电源连接线护套A	COVERING A,POWER SOURCE LINE	1					
21	GB/T818-M5×12	十字槽盘头螺钉 M5x12	SCREW M5x12	1					
22	GB/T93-5	弹簧垫圈 5	SPRING WASHER 5	1					
23	GB/T97.1-5	平垫圈 5	WASHER 5	1					
24	F8-09000400W	启动电机	STARTUP MOTOR	1					
25	F8-09000401W	启动电机架	PLANK,STARTUP MOTOR	1					
26	GB/T70.1-M8x20	内六角螺钉 M8x20	BOLT M8x20	2					

零部件名称:	进气系统
PARTS NAME:	INTAKE

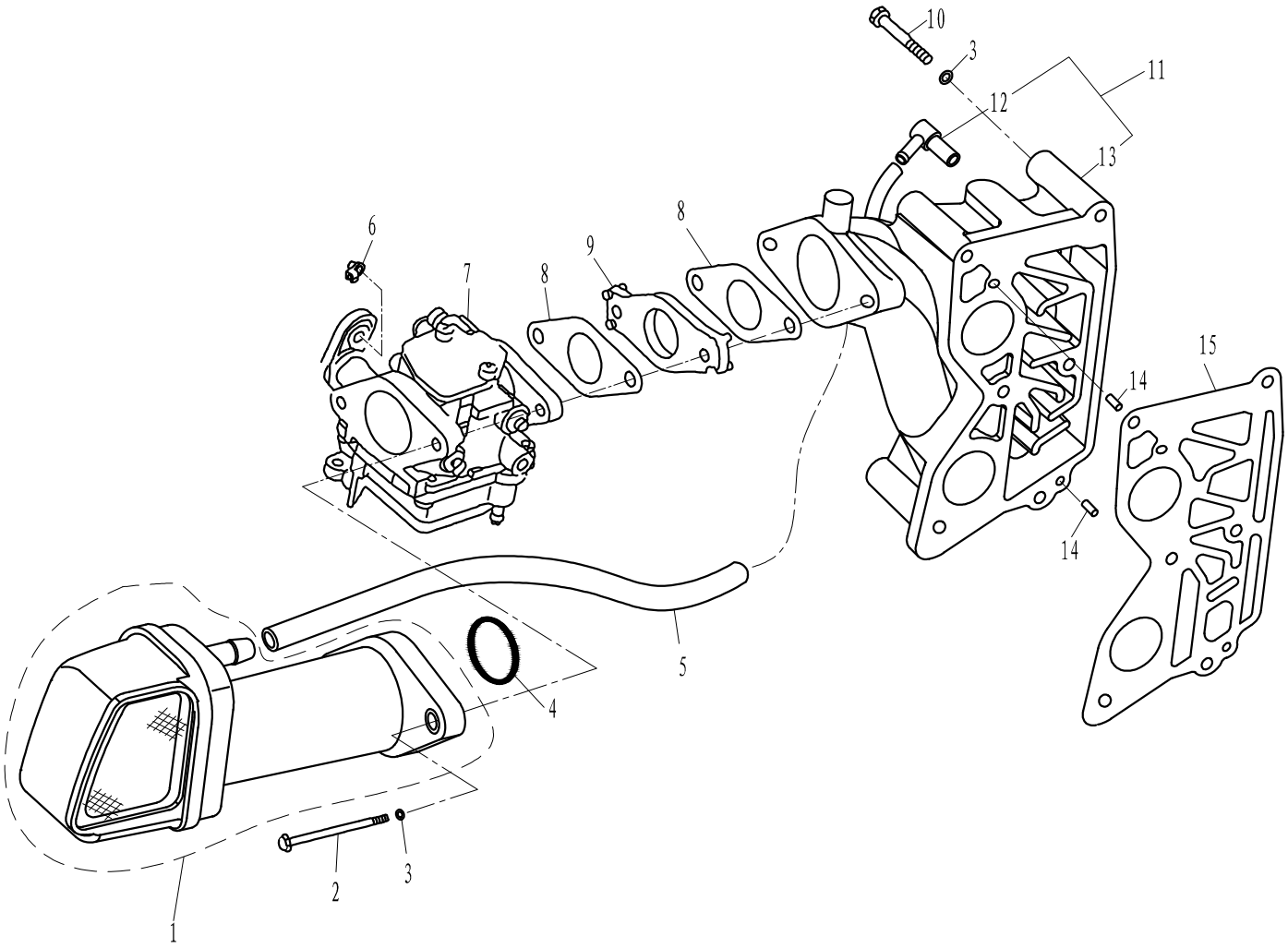

SN. 参照号码	PART NO. 零件编号	DESCRIPTION 零件名称(中文)	DESCRIPTION 零件名称(英文)	QTY 数量					REMARKS 备注
1	F8-05060000	进气消音器组件	SILENCER ASSY, INTAKE	1					
2	GB/T5782-M6X100	六角螺栓M6X100	HEXAGON BOLT M6X100	2					
3	GB/T97.1-6	平垫圈 6	WASHER 6	8					
4	GB/T3452.1-35.5X1.8	O型圈 35.5X1.8	O-RING 35.5X1.8	1					
5	F8-050000023	回气管 Φ10xΦ5x245	HOSE Φ10xΦ5x245	1					
6	F15-07000016W	油门控制杆接头	CONTACT	1					
7	F8-05040000	化油器总成	CARBURETOR	1					
8	F15-07000017	化油器纸垫	GASKET, CARBURETOR	2					
9	F15-07000018	化油器绝缘垫	INSULATOR, CARBURETOR	1					
10	GB/T5782-M6X45	六角螺栓M6X45	HEXAGON BOLT M6X45	6					
11	F8-05080000	进气歧管组件	INTAKE MANIFOLD ASSY	1					
12	F8-05000700	气嘴组件	GAS NIPPLE ASSY	1					
13	F8-05000008	进气歧管	INTAKE MANIFOLD	1					
14	GB/T879.2-3x10	弹性圆柱销3x10	PIN 3x10	2					
15	F8-05000009	进气歧管密封垫	GASKET, MANIFOLD	1					

零部件名称:	气缸头
PARTS NAME:	CYLINDER HEAD

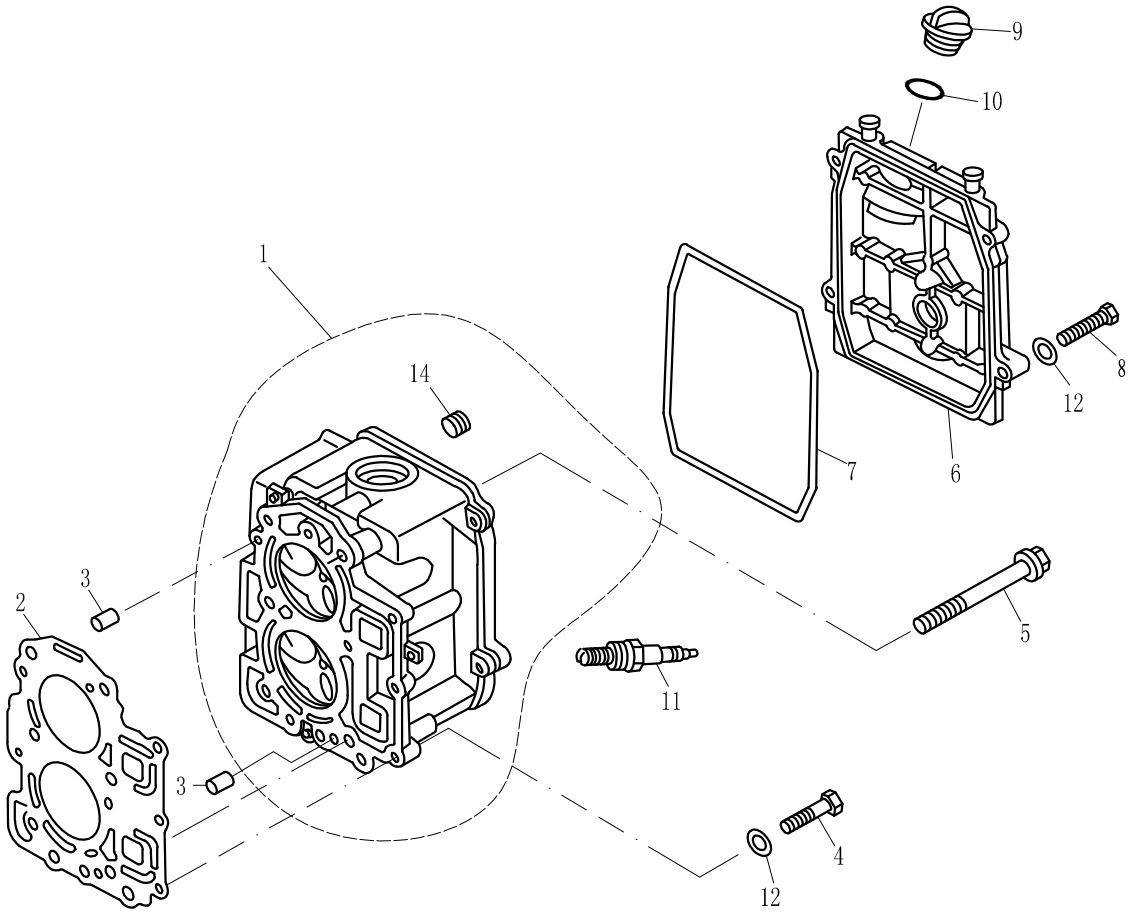

参照号码	PART NO. 零件编号	DESCRIPTION 零件名称(中文)	DESCRIPTION 零件名称(英文)	QTY 数量					REMARKS 备注
1	F8-05030100	气缸头组件	CYLINDER HEAD ASSY	1					
2	F8-05000100	气缸垫组件	CYLINDER HEAD GASKET	1					
3	F15-00000006	定位销 6x12	KNOCK 6x12	2					
4	F8-05000022	六角螺栓 M6x25	BOLT M6x25	3					
5	F4-04000039	六角凸缘螺栓 M8x50	BOLT M8x50	6					
6	F8-05000001	缸头罩	CYLINDER HEAD COVER	1					
7	F8-05000002	缸头罩密封圈	CYLINDER HEAD COVER GASKET	1					
8	GB/T5783-M6x25	六角螺栓 M6x25	BOLT M6x25	4					
9	F15-07050004	加油口盖	FILLER CAP,ENGINE OIL	1					
10	JASO F404 35 025	加油口盖密封圈	O-RING	1					
11	NGK DPR7EA-9	火花塞	SPARK PLUG	2					
12	GB/T97.1-6	平垫圈 6	WASHER 6	7					
13	F15-07010005	堵塞 1/4"	STOPPER 1/4"	2					

零部件名称:	曲轴和活塞
PARTS NAME:	CRANKSHAFT & PISTON

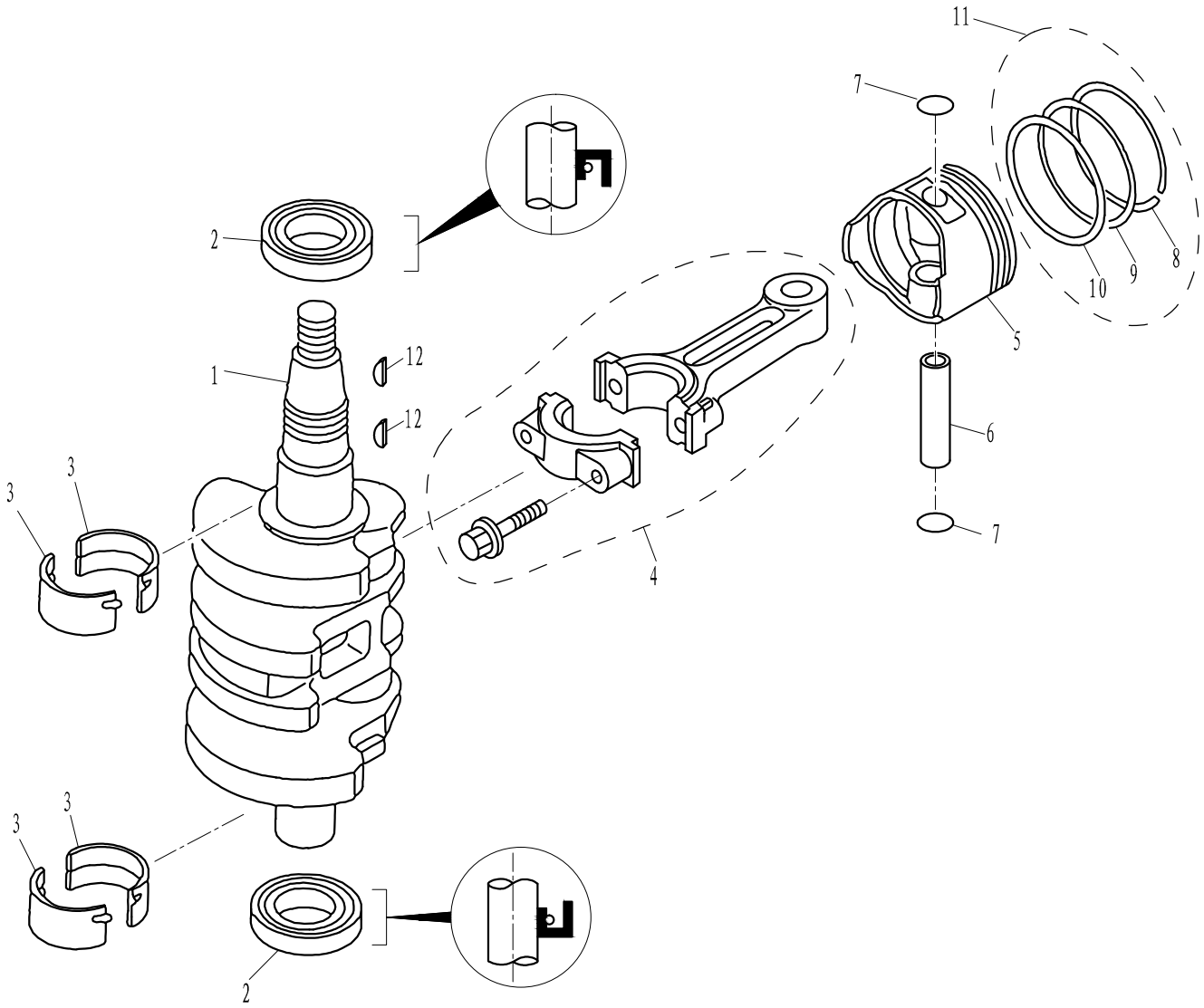

SN. 参照号码	PART NO. 零件编号	DESCRIPTION 零件名称(中文)	DESCRIPTION 零件名称(英文)	QTY 数量					REMARKS 备注
1	F8-05020001	曲轴	CRANK	1					
2	F8-05010012	曲轴油封 30x45x8	OIL SEAL	2					
3	F8-05010009	轴瓦	BUSH	4					
4	F8-05020200	连杆组件	ROD, CONNECTING	2					
5	F8-05020101	活塞	PISTON	2					
6	F8-05020105	活塞销	PIN, PISTON	2					
7	F15-07020005	活塞销挡圈	CIRCLIP	4					
8	F8-05020102	活塞环 I	PISTON RING I	2					
9	F8-05020103	活塞环 II	PISTON RING II	2					
10	F8-05020104	组合油环	COMBINATION OIL RING	2					
11	F8-05020300	活塞环组件	PISTON RING ASSY	2					
12	F4-04000019	半圆键	KEY	2					

零部件名称:	曲轴箱
PARTS NAME:	CRANK CASE

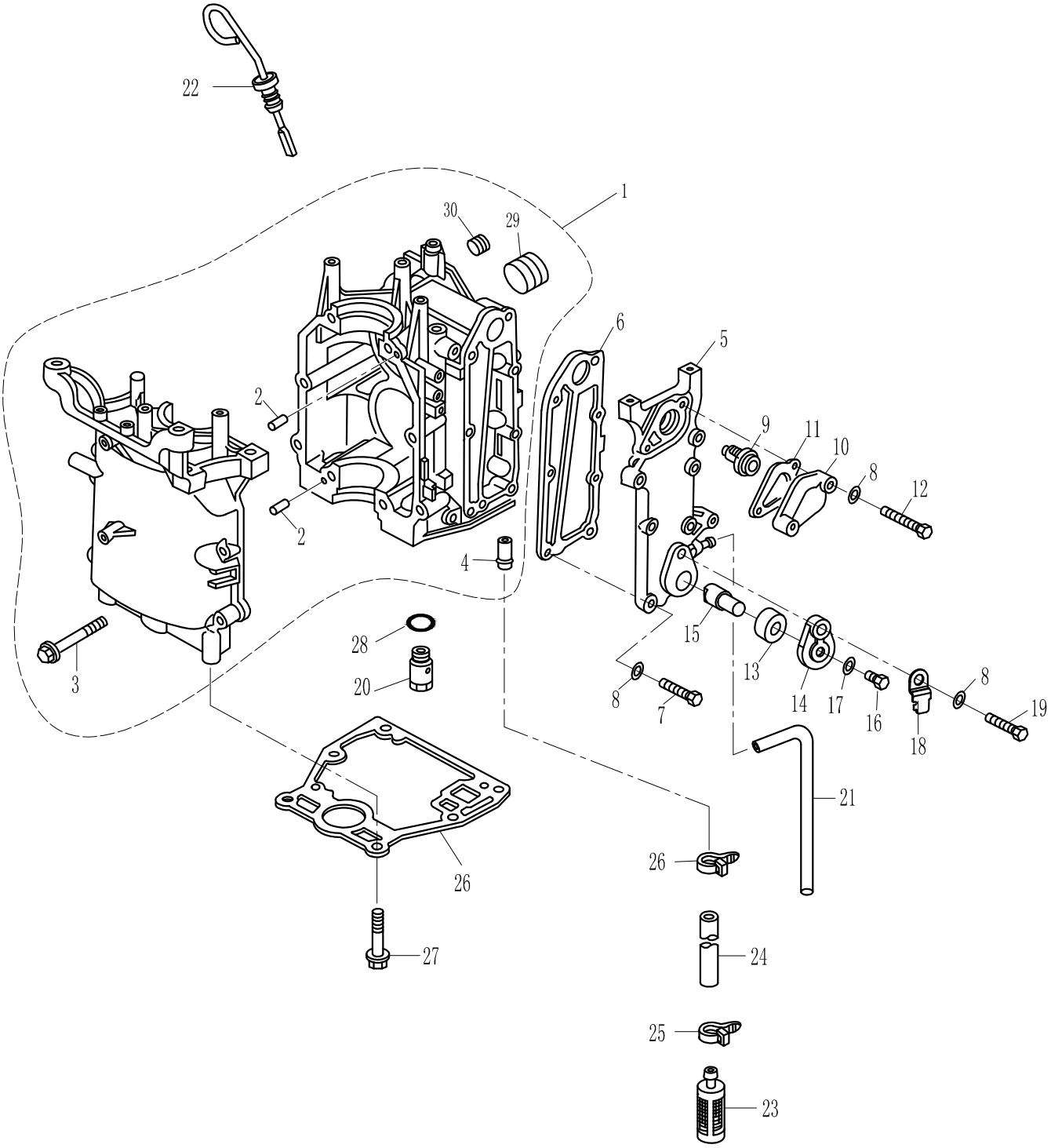

零部件名称: 曲轴箱

PARTS NAME: CRANKCASE

SN. 参照号码	PART NO. 零件编号	DESCRIPTION 零件名称(中文)	DESCRIPTION 零件名称(英文)	QTY 数量					REMARKS 备注
1	F8-05010000	机体机座组件	CRANKCASE ASSY	1					
2	F15-00000006	定位销 6x12	PIN 6x12	2					
3	F4-04000039	六角凸缘螺栓 M8x50	BOLT M8x50	8					
4	F8-05010002	精滤器接头	NIPPLE	1					
5	F8-05010003	水道盖板	EXHAUST COVER	1					
6	F8-05010004	水道盖板密封垫	GASKET, EXHAUST COVER	1					
7	GB/T5783-M6x25	六角螺栓 M6x25	BOLT M6x25	5					
8	GB/T97.1-6	平垫圈 6	WASHER 6	8					
9	F15-07000031	节温器	THERMOSTAT	1					
10	F8-05010006	节温器盖	THERMOSTAT COVER	1					
11	F8-05010005	节温器盖垫	GASKET, THERMOSTAT COVER	1					
12	GB/T5783-M6x40	六角螺栓 M6x40	BOLT M6x40	2					
13	F15-07010009	阳极密封圈	SEAL, ANODE	1					
14	F15-07010011	阳极盖板	ANODE COVER	1					
15	F15-07010008	机体阳极	ANODE	1					
16	GB/T818-M5x12	十字槽盘头螺栓 M5x12	BOLT M5x12	1					
17	GB/T97.1-5	平垫圈 5	WASHER 5	1					
18	F15-07010012	阳极止锁片	LOCKING PLATE, ANODE	1					
19	GB/T5783-M6x20	六角螺栓 M6x20	BOLT M6x20	1					
20	F8-05000900	溢流阀组件	PLUNGER	1					
21	F8-05000026	水管	WATER PIPE	1					
22	F8-00000200	机油尺组件	OIL LEVEL GAUGE	1					
23	F8-05000800	精滤器组件	OIL STRAINER	1					
24	F8-05000017	吸油管	HOSE	1					
25	F8-05000025	卡箍	HOOP	2					
26	F8-00000004	发动机密封垫组件	GASKET, ENGINE BASEMENT	1					
27	F8-00000003	法兰螺栓 M8x35	BOLT M8x35	6					
28	GB/3452.1-13.2x1.8	溢流阀O形圈 13.2x1.8	O-RING	1					
29	F15-07010005	堵塞1/4"	STOPPER 1/4"	2					
30	F15-07010004	堵塞1/8"	STOPPER 1/8"	2					

零部件名称:	阀门
PARTS NAME:	VALVE

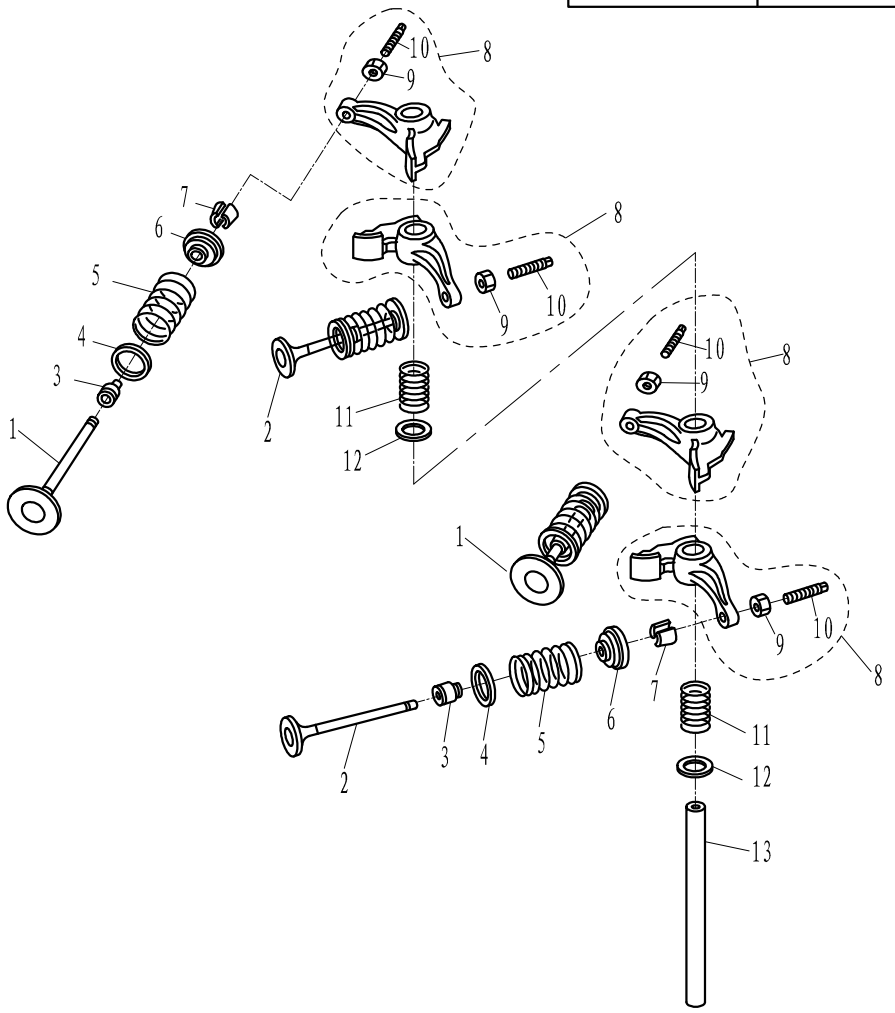

SN. 参照号码	PART NO. 零件编号	DESCRIPTION 零件名称(中文)	DESCRIPTION 零件名称(英文)	QTY 数量					REMARKS 备注
1	F8-05030001	进气门	VALVE, INTAKE	2					
2	F8-05030002	排气门	VALVE, EXHAUST	2					
3	PS2700.04.03	气门油封	SEAL, VALVE STEM	4					
4	F8-05030004	气门弹簧垫圈	SEAL, VALVE SPRING	4					
5	F8-05030005	气门弹簧	SPRING, VALVE	4					
6	F8-05030006	气门弹簧座圈	RETAINER, VALVE SPRINGRE	4					
7	F8-05030007	气门锁夹	COTTER, VALVE	8					
8	F8-05030200	摇臂组件	ROCKER ASSY	4					
9	F15-07040304	锁紧螺母	LOCK NUT	4					
10	F15-07040303	调整螺钉	SCREW, VALVE ADJUSTING	4					
11	F8-05030009	摇臂弹簧	SPRING, ROCKER	2					
12	F8-05030015	摇臂弹簧垫圈	BUSHER, ROCKER SPRING	2					
13	F8-05030010	摇臂轴	SHAFT, ROCKER	1					

零部件名称:	凸轮轴
PARTS NAME:	CAMSHAFT

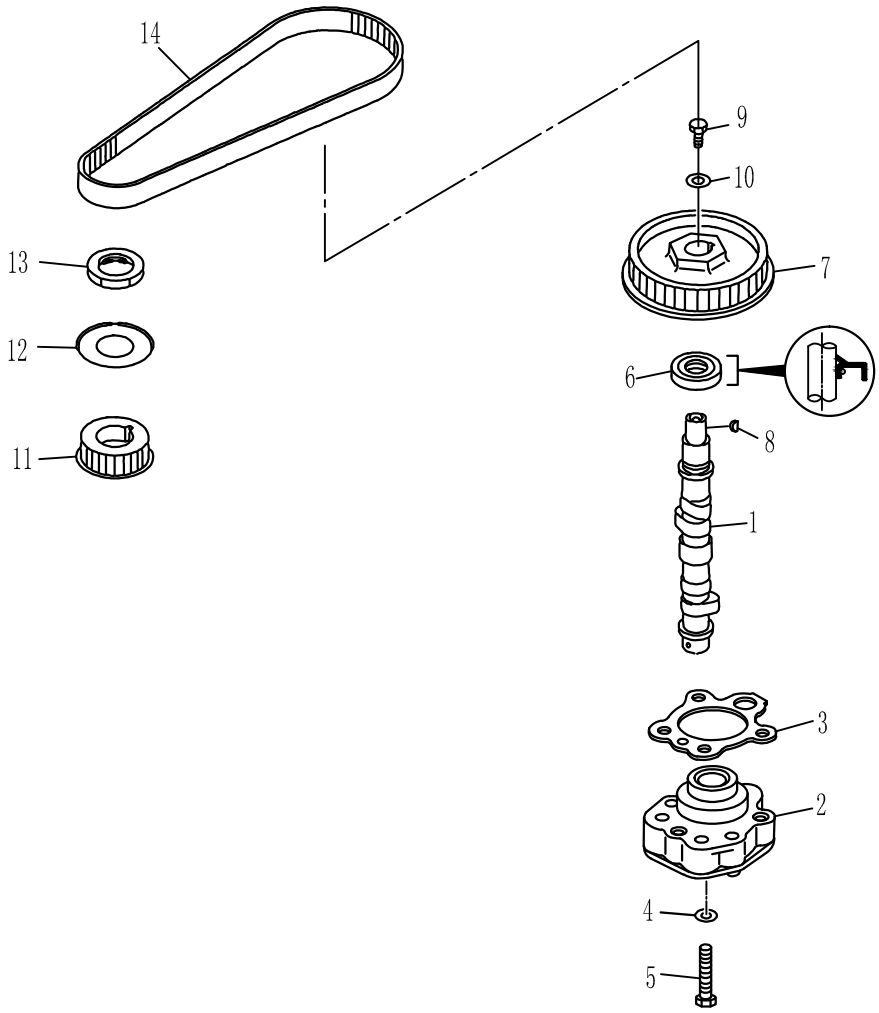

SN. 参照号码	PART NO. 零件编号	DESCRIPTION 零件名称(中文)	DESCRIPTION 零件名称(英文)	QTY 数量					REMARKS 备注
1	F8-05030008	凸轮轴	CAMSHAFT	1					
2	F8-05030300	机油泵组件	OIL PUMP	1					
3	F8-05030012	机油泵金属密封垫	OIL PUMP GASKET	1					
4	GB/T97.1-6	平垫圈 6	WASHER 6	3					
5	GB/T5783-M6x35	六角螺栓 M6x35	BOLT M6x35	3					
6	F8-05030011	凸轮轴油封 18x35x7.8	OIL SEAL 18x35x7.8	1					
7	F8-05030400	从动带轮组件	DRIVER PULLEY	1					
8	T3.6-04000006	飞轮半圆键	KEY	1					
9	GB/T5783-M6x20	六角螺栓 M6x20	BOLT M6x20	1					
10	F8-05030014	从动带轮垫圈	WASHER	1					
11	F8-05010014	正时带轮	DRIVER PULLEY	1					
12	F8-05010015	正时带轮盖板	BELT GUIDER	1					
13	F8-05010016	正时带轮螺母	NUT	1					
14	F8-05000004	正时皮带	TIMING BELT	1					

零部件名称:	燃油系统
PARTS NAME:	FUEL SYSTEM

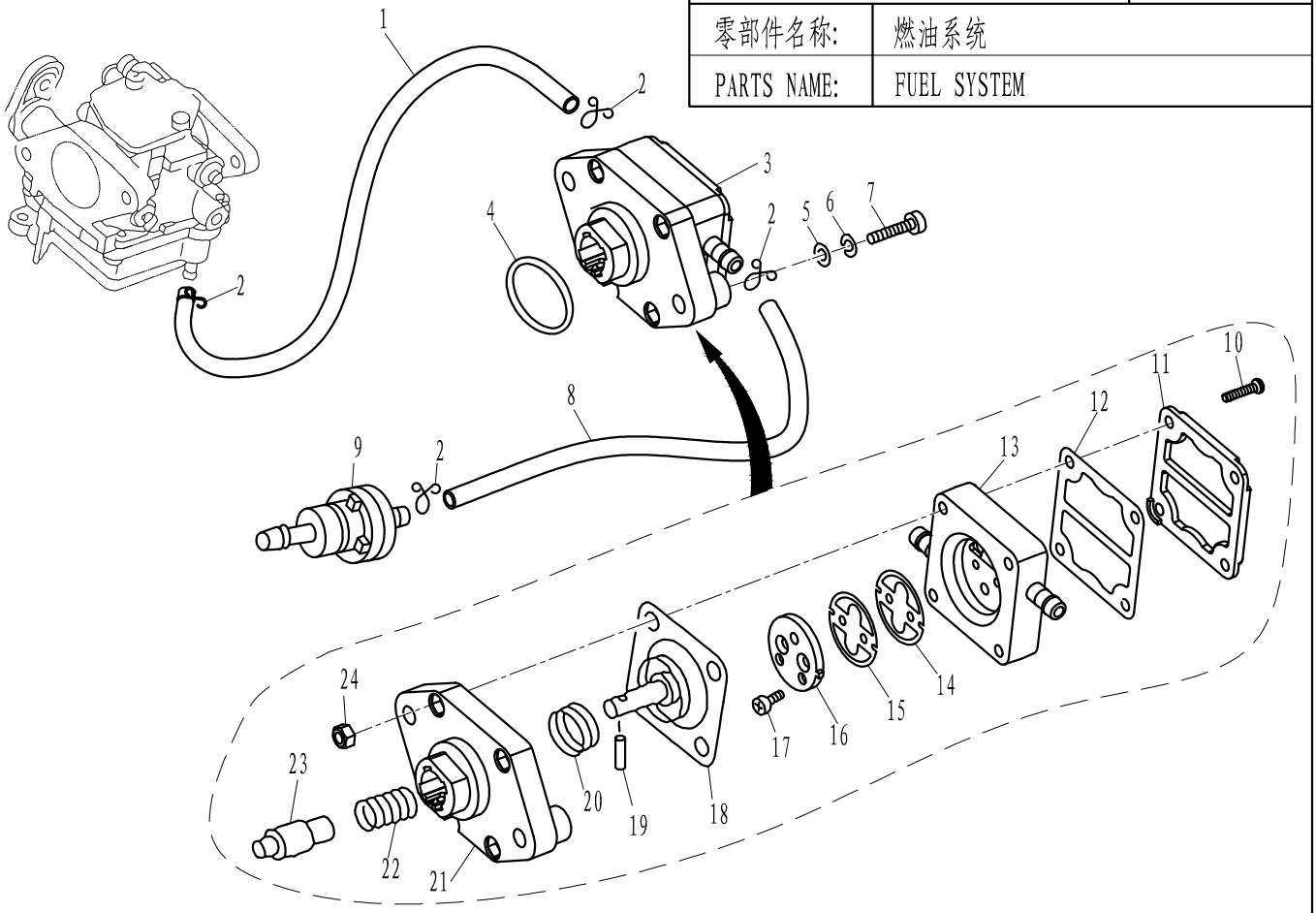

SN. 参照号码	PART NO. 零件编号	DESCRIPTION 零件名称(中文)	DESCRIPTION 零件名称(英文)	QTY 数量					REMARKS 备注
1	F8-05000015	油泵燃油管（出）Φ10XΦ5X280	FUEL HOSE	1					
2	F4-04000030	油管夹簧B	CLIP"B", FUEL HOSE	4					
3	F8-05070000	燃油泵组件	FUEL PUMP ASSY	1					
4	JASO F404-A-24-021	燃油泵O型圈	O-RING, FUEL PUMP	1					
5	GB/T97.1-6	平垫圈 6	WASHER 6	2					
6	GB/T93-6	弹簧垫圈 6	SPRING-WASHER 6	2					
7	GB/T5783-M6X30	六角螺栓 M6X30	BOLT M6X30	2					
8	F8-05000014	油泵燃油管（进）Φ10XΦ5X180	FUEL HOSE	1					
9	F4-05000300	燃油过滤器组件	FUEL FILTER ASSY	1					
10	GB/T823-M4X25	十字槽小盘头螺钉M4X25	SCREW, SMALL PAN HEAD M4X25	4					
11	F4-04090003	燃油泵盖	COVER, FUEL PUMP	1					
12	F4-04090004	上隔膜	TOP DIAPHRAGM	1					
13	F4-04090100A	燃油泵壳	SHELL, FUEL PUMP	1					
14	F4-04090001A	瓣膜B	VALVE "B"	1					
15	F4-04090002A	瓣膜A	VALVE "A"	1					
16	F4-04090003A	隔膜限位块	LIMITING BLOCK, SEPTUM	1					
17	GB/T819.2-M3X5	十字槽沉头螺钉M3X5	SCREW M3X5	2					
18	F4-04090100	隔膜组件	DIAPHAGH ASSY	1					
19	GB/T309-3X12	滚针Φ3X12	ROLLER NEEDLE Φ3X12	1					
20	F4-04090008	隔膜弹簧	SPRING, DIAPHRAGM	1					
21	F4-04090001	燃油泵座	SEAT, FUEL PUMP	1					
22	F4-04090007	柱塞弹簧	SPRING, PLUNGER	1					
23	F8-05070001	柱塞	PLUNGER	1					
24	GB/T6170-M4	螺母 M4	NUT M4	4					

零部件名称:	起动器
PARTS NAME:	STARTER

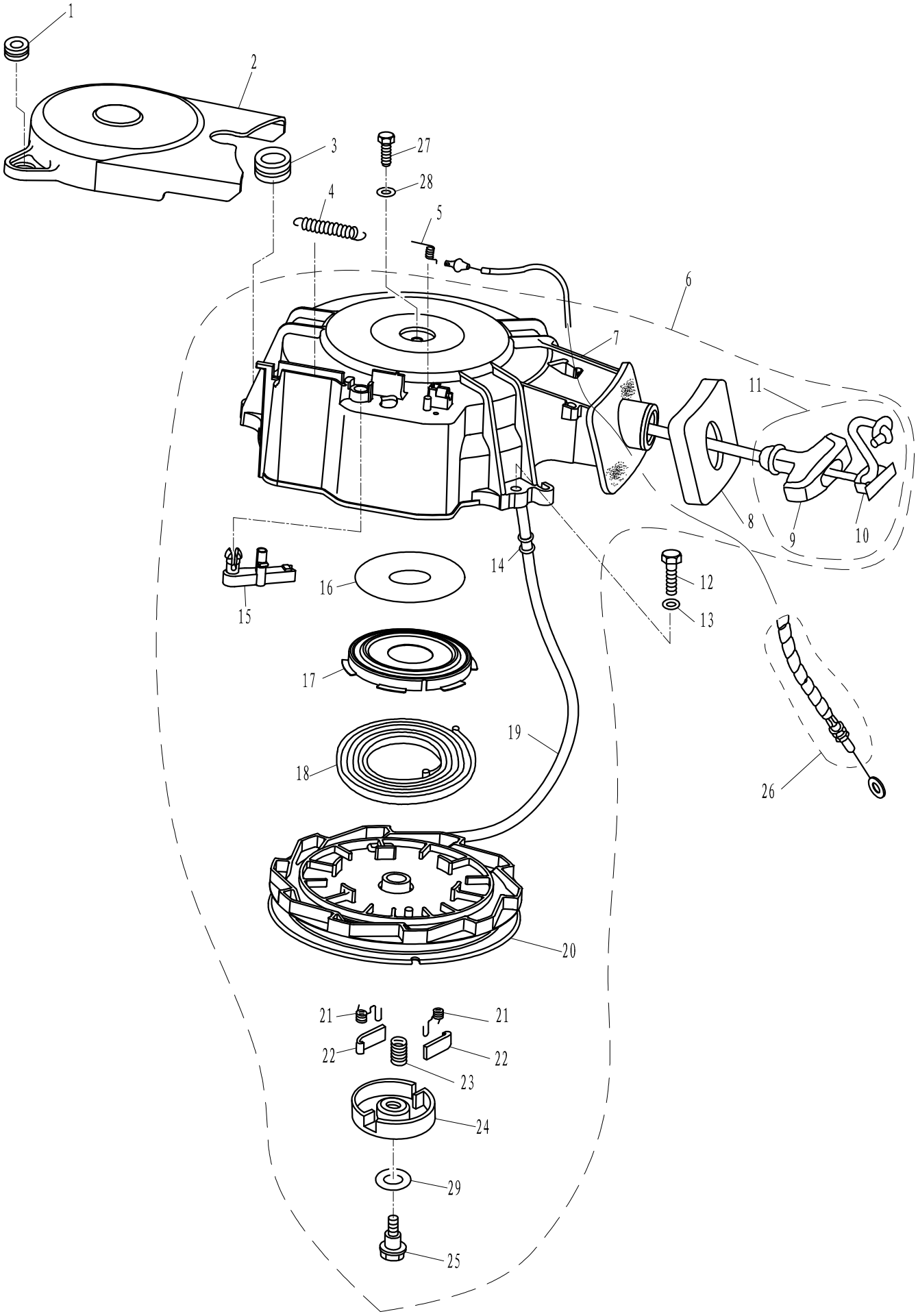

零部件名称: 起动器

PARTS NAME: STARTER

SN. 参照号码	PART NO. 零件编号	DESCRIPTION 零件名称(中文)	DESCRIPTION 零件名称(英文)	QTY 数量					REMARKS 备注
1	F8-05000003	带轮罩橡胶圈A	RUBBER GROMMET A	2					
2	F8-05000012	皮带罩壳	COVER, STRAP	1					
3	F8-05000013	带轮罩橡胶圈B	RUBBER GROMMET B	1					
4	F15-05000029	制动器钢索拉簧	SPRING, TIGHTWIRE	1					
5	F15-07130106	制动器扭簧	SPRING, ARRESTER	1					
6	F8-05050000	起动器组件	STARTER ASSY	1					
7	F8-05050100	起动器外壳组件	CASING ASSY, STARTER	1					
8	F8-05050017	发泡密封圈	SEAL, FROTHY RUBBER	1					
9	F4-04130101	起动手柄	HANDLE, STARTER	1					
10	F4-04130102	起动手柄盖	COVER, HANDLE	1					
11	F4-04130100	起动手柄组件	HANDLE, STARTER ASSY	1					
12	GB/T5783-M6X25	六角螺钉 M6X25	BOLT M6X25	3					
13	GB/T97.1-6	平垫圈 6	WASHER 6	3					
14	F4-04130013	起动绳导向管	COLLAR	1					
15	F15-07130105	制动器	ARRESTER	1					
16	F8-05050002	减磨片	WASHER, THRUST	1					
17	F8-05050003	涡形弹簧座	SPRING CASE	1					
18	F8-05050004	涡形弹簧	VOLUTE SPRING	1					
19	F8-05050018	起动绳（Φ4X1.62m)	START LINE	1					
20	F8-05050005	起动轮	WHEEL, START-UP	1					
21	F8-05050007	卡瓣扭簧	SPRING, TENSION	2					
22	F8-05050006	起动卡瓣	PAWL, DRIVE	2					
23	F8-05050009	压板弹簧	SPRING, PLATE	1					
24	F8-05050008	起动轮压板	PLATE, DRIVE	1					
25	F8-05050010	压板螺钉	BOLT	1					
26	F8-05050200	制动器钢索组件	ARRESTER, TIGHTWIRE ASSY	1					
27	GB/T5783-M5x8	六角螺钉 M5x8	BOLT M5x8	1					
28	GB/T96-5	大垫圈 5	WASHER 5	1					
29	T20-03000002	变档尼龙垫圈	NYLON WASHER, SHIFT GEAR	1					

零部件名称:	顶罩组件
PARTS NAME:	TOP COWLING ASSY

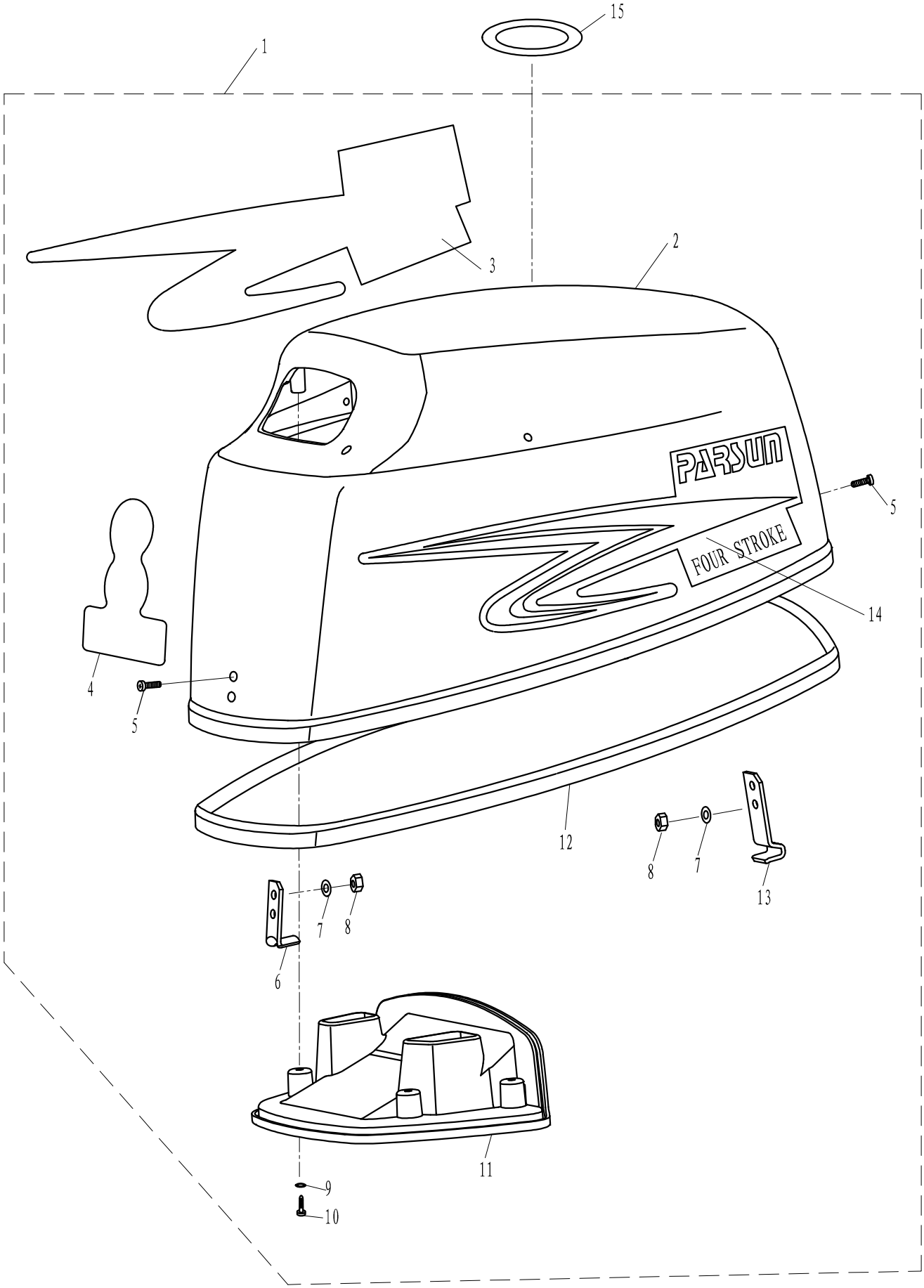

零部件名称: 顶罩组件

PARTS NAME: TOP COWLING ASSY

SN. 参照号码	PART NO. 零件编号	DESCRIPTION 零件名称(中文)	DESCRIPTION 零件名称(英文)	QTY 数量					REMARKS 备注
1	F8-06000000	顶罩组件	TOP COWLING ASSY	1					
2	F8-06000001	顶罩	TOP COWLING	1					
3	F15-12000002	标贴 2	MARK 2	1					
4	F8-08000007	标贴7	MARK 7	1					F8
	F8-08000008	标贴8	MARK 8	1					F9.8
5	GB/T818-M6x16	十字槽盘头螺钉M6×16	SCREW,PAN HEAD M6x16	4					
6	F15-08000004	挂钩	POTHOOK	1					
7	GB/T97.1-6	平垫圈6	WASHER 6	4					
8	GB/T6170-M6	六角螺母M6	NUT M6	4					
9	F4-06000004	橡胶垫片	UNDERLAY,RUBBER	4					
10	GB/T845-ST4.8x19	十字槽盘头自攻螺钉 ST4.8x19	SCREW,TAPPING ST4.8x19	4					
11	F8-06000003	顶罩消音器盖	COVER,TOP COWLING MUFFLE	1					
12	F8-06000002	密封橡胶条	SEAL	1					
13	F15-08000005	锁紧钩	HOOK,LOCKING	1					
14	F15-12000001	标贴 1	MARK 1	1					
15	F4-08000019	标贴3	MARK 3	1					

零部件名称:	燃油箱(12L)
PARTS NAME:	FUEL TANK(12L)

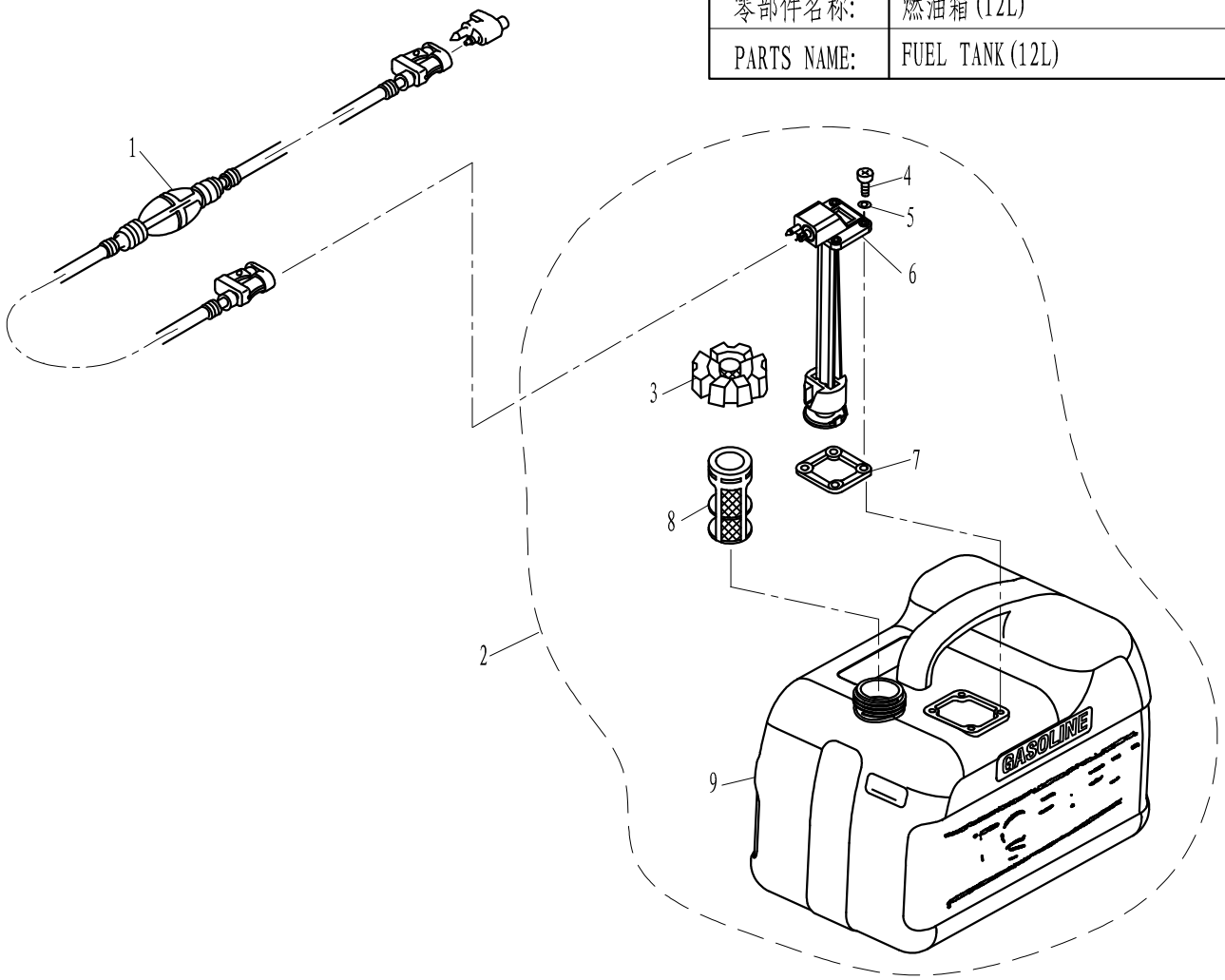

SN. 参照号码	PART NO. 零件编号	DESCRIPTION 零件名称(中文)	DESCRIPTION 零件名称(英文)	QTY 数量					REMARKS 备注
1	F15-09000000	油管总成	OIL TUBE ASSY	1					
2	F8-10000000	油箱组件	FUEL TANK ASSY	1					
3	F15-10010000	油箱盖组件	COVER ASSY,FUEL TANK	1					
4	GB/T818-M5x18	十字槽盘头螺钉M5x18	SCREW ,PAN HEAD M5x18	4					
5	GB/T97.1-5	平垫圈5	WASHER 5	4					
6	F15-10020000	油量计总成	OLEOMETER ASSY	1					
7	F15-10000003	衬垫	GASKET	1					
8	F15-10000002	油箱滤网	STRAINER	1					
9	F8-10000001	油箱本体	FUEL TANK	1					(12L)

零部件名称:	化油器
PARTS NAME:	CARBURETOR

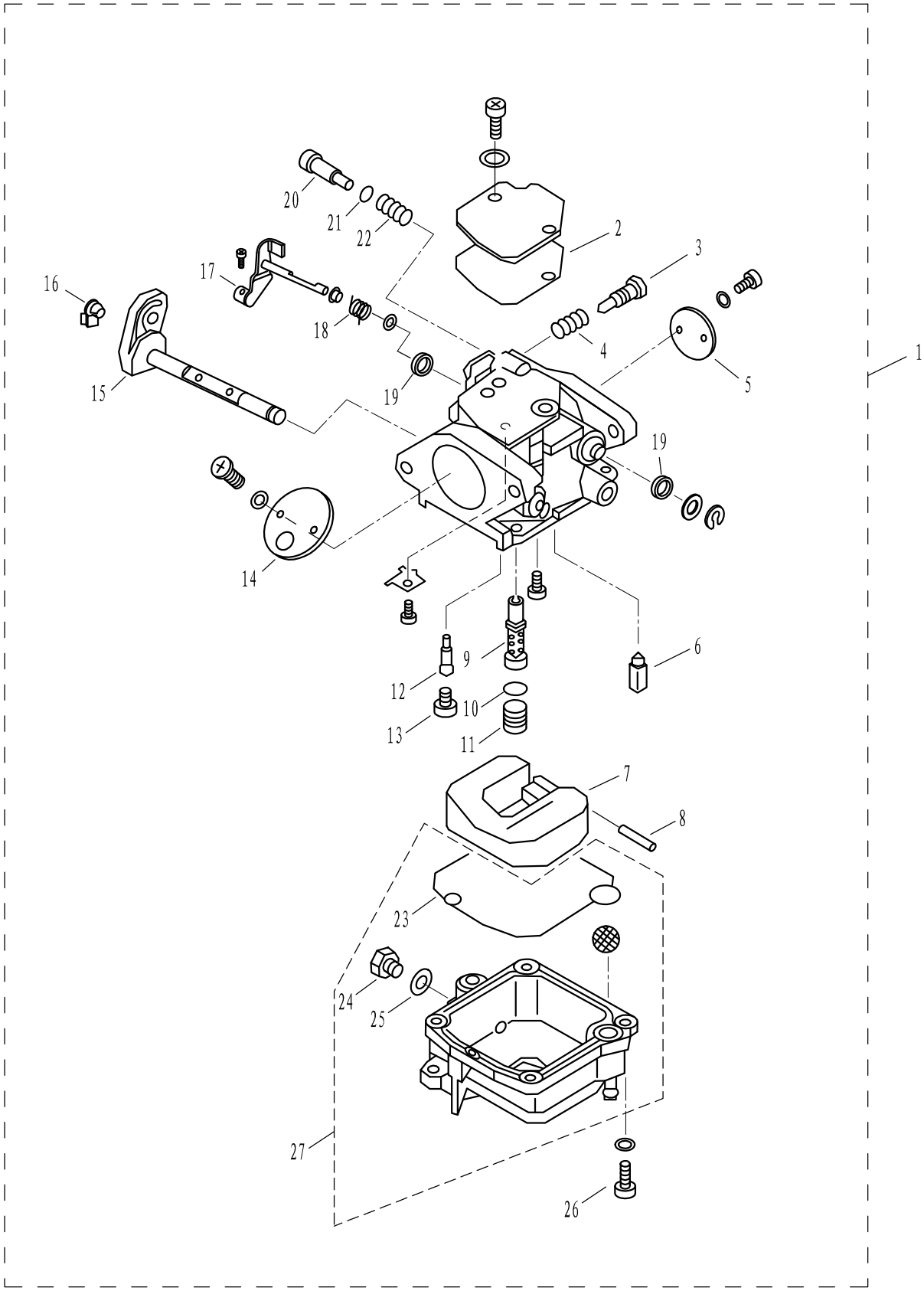

零部件名称: 化油器

PARTS NAME: CARBURETOR

SN. 参照号码	PART NO. 零件编号	DESCRIPTION 零件名称(中文)	DESCRIPTION 零件名称(英文)	QTY 数量					REMARKS 备注
1	F8-05040000	化油器总成	CARBURETOR ASSY	1					
2	F8-05040002	衬垫	GASKET	1					
3	F8-05040009	油门止动螺钉	BOLT	1					
4	F8-05040010	油门止动螺钉弹簧	SPRING, THORTTEL	1					
5	F8-05040008	油门挡板	APRON, ACCELERATOR	1					
6	F8-05040019	针阀	VALVE, NEEDLE	1					
7	F8-05040020	浮子	FLOAT	1					
8	T8-05040021	浮子销	PIN, FLOAT	1					
9	F8-05040022	主喷嘴	NOZZLE, MAIN	1					
10	F8-05040024	主量孔密封圈	SEAL	1					
11	F8-05040023	主量孔	JET, MAIN	1					
12	F8-05040025	怠速量孔	JET, AIR SLOW	1					
13	F8-05040026	怠速量孔螺钉	RUBBER CAPN	1					
14	F8-05040012	阻风门挡板	APRON, CHOKE	1					
15	F8-05040200	阻风门摆杆组件	LINK, CHOKE	1					
16	T6-05000022	油门控制器连杆接头	TIE, IN	1					
17	F8-05040100	油门摆杆组件	SWING LINK, ACCELERATOR	1					
18	F8-05040005	油门摆杆扭簧	WRING SPRING	1					
19	F8-05040007	橡胶密封圈	SEAL	2					
20	F8-05040013	怠速螺钉	SCREW, AIR ADJUSTING	1					
21	F8-05040014	O型圈	SEAL	1					
22	F8-05040015	怠速螺钉弹簧	SPRING, AIR ADJUSTING	1					
23	F8-05040027	油杯密封垫	GASKET, FLOAT CHAMBER	1					
24	F8-05040403	放油螺钉	SCREW, DRAIN	1					
25	F8-05040401	螺钉垫片	GASKET	1					
26	GB/T818-M4x12	十字槽盘头螺钉M4x12	BOLT	4					
27	F8-05040400	油杯组件	BODY, FLOAT CHAMBER	1					

零部件名称:	气缸头总成(维修件)
PARTS NAME:	CYLINDER HEAD ASSY (REPARE KIT)

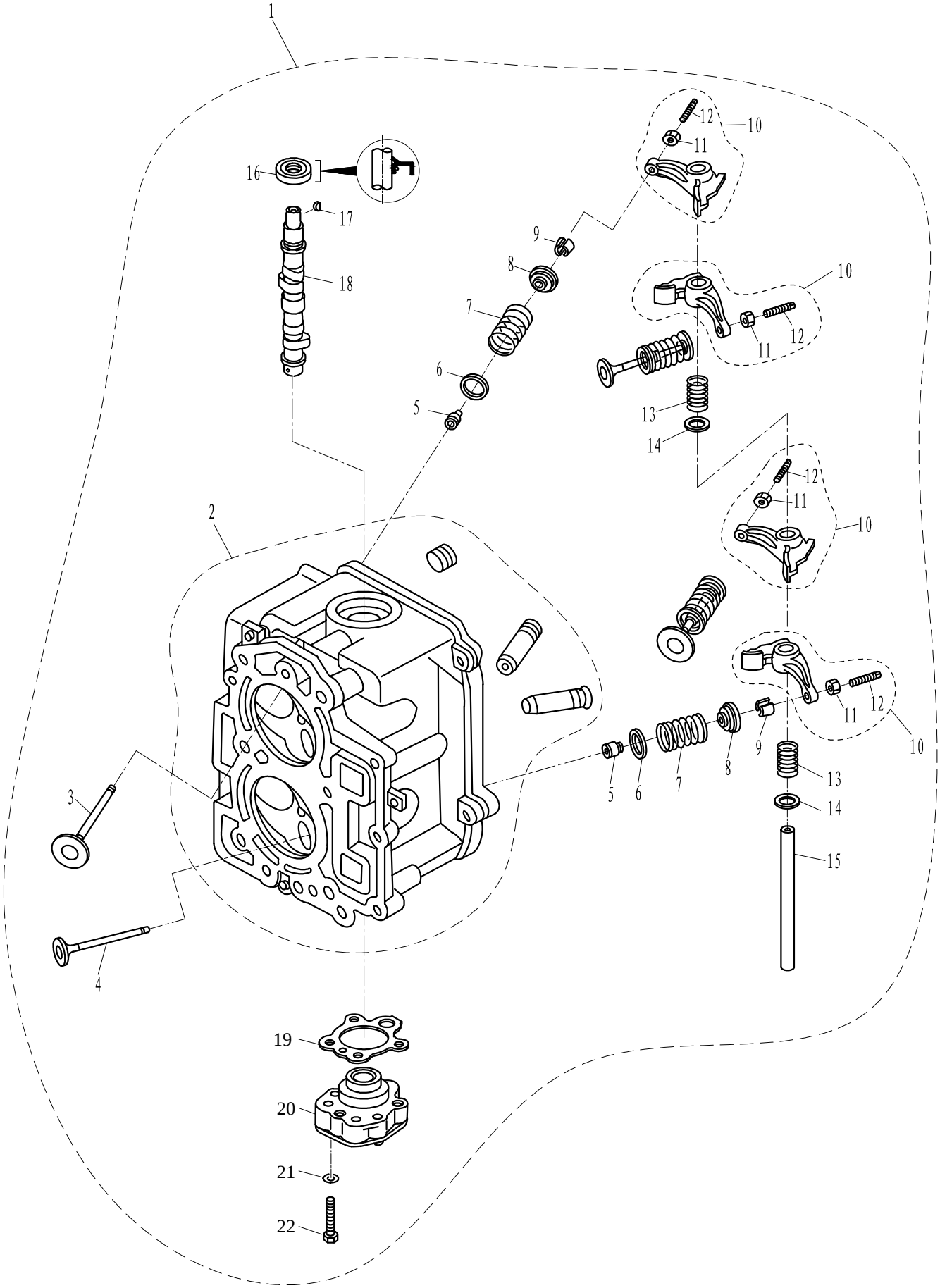

零部件名称: 气缸头总成(维修件)

PARTS NAME: CYLINDER HEAD ASSY (REPARE KIT)

SN. 参照号码	PART NO. 零件编号	DESCRIPTION 零件名称(中文)	DESCRIPTION 零件名称(英文)	QTY 数量					REMARKS 备注
1	F8-05030000	气缸头总成	CYLINDER HEAD ASSY	1					
2	F8-05030100	气缸头组件	CYLINDER HEAD SUBASSEMBLY	1					
3	F8-05030001	进气门	VALVE, INTAKE	2					
4	F8-05030002	排气门	VALVE, EXHAUST	2					
5	PS2700.04.03	气门油封	SEAL, VALVE STEM	4					
6	F8-05030004	气门弹簧垫圈	SEAL, VALVE SPRING	4					
7	F8-05030005	气门弹簧	SPRING, VALVE	4					
8	F8-05030006	气门弹簧座圈	RETAINER, VALVE SPRINGRE	4					
9	F8-05030007	气门锁夹	COTTER, VALVE	8					
10	F8-05030200	摇臂组件	ROCKER ASSY	4					
11	F15-07040304	锁紧螺母	LOCK NUT	4					
12	F15-07040303	调整螺钉	SCREW, VALVE ADJUSTING	4					
13	F8-05030009	摇臂弹簧	SPRING, ROCKER	2					
14	F8-05030015	摇臂弹簧垫圈	BUSHER, ROCKER SPRING	2					
15	F8-005030010	摇臂轴	SHAFT, ROCKER	1					
16	F8-05030011	凸轮轴油封 18x35x7.8	OIL SEAL 18x35x7.8	1					
17	T3.6-04000006	飞轮半圆键	KEY	1					
18	F8-05030008	凸轮轴	CAMSHAFT	1					
19	F8-05030012	机油泵金属密封垫	OIL PUMP GASKET	1					
20	F8-05030300	机油泵组件	OIL PUMP	1					
21	GB/T97.1-6	平垫圈 6	WASHER 6	3					
22	GB/T5783-M6x35	六角螺栓 M6x35	BOLT M6x35	3					

零部件名称:	发动机头总成
PARTS NAME:	ENGINE ASSY

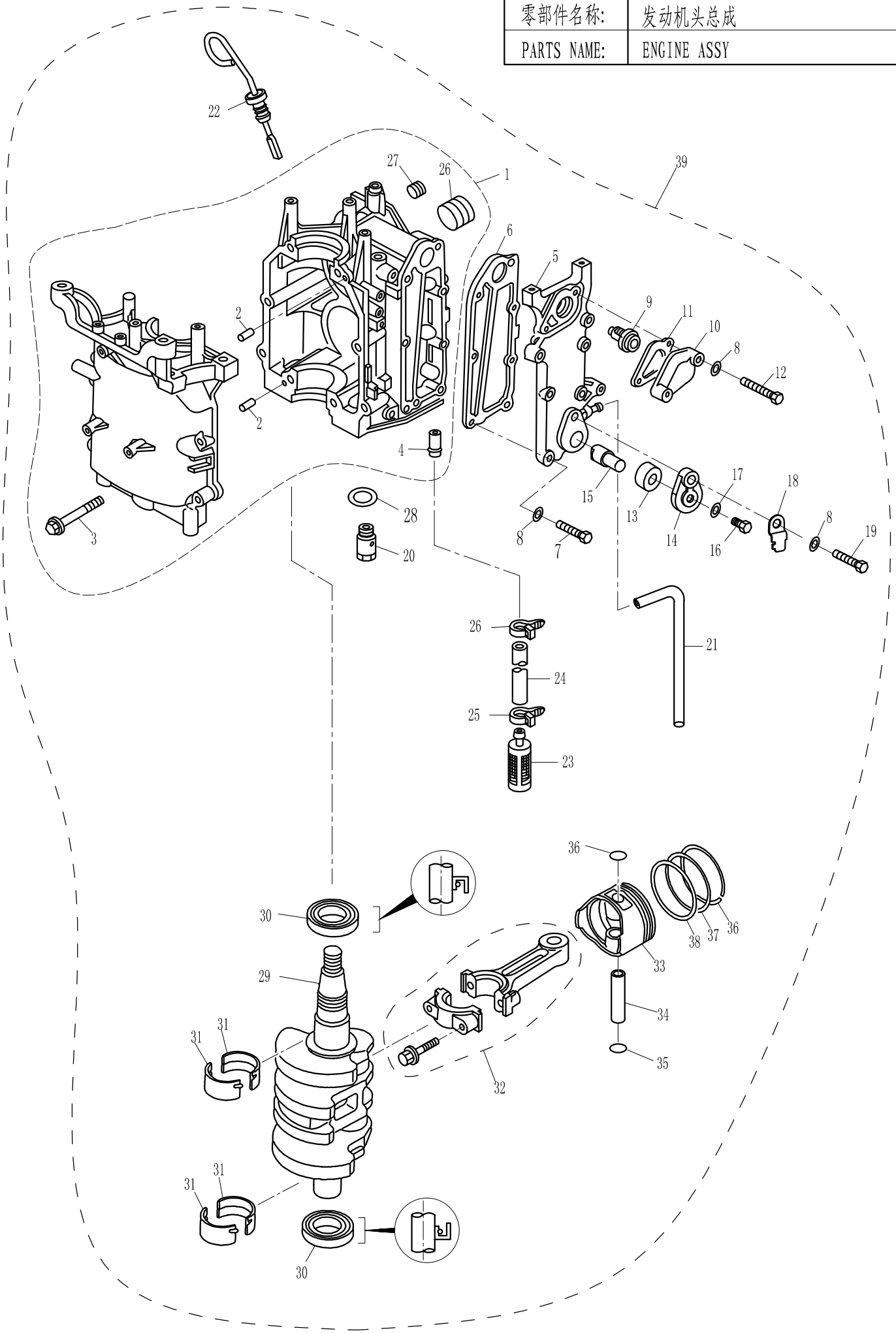

零部件名称: 发动机头总成

PARTS NAME: ENGINE ASSY

SN. 参照号码	PART NO. 零件编号	DESCRIPTION 零件名称(中文)	DESCRIPTION 零件名称(英文)	QTY 数量					REMARKS 备注
1	F8-05010000	机体机座组件	CRANKCASE ASSY	1					
2	F15-00000006	定位销 6x12	KNOCK 6x12	2					
3	F4-04000039	六角凸缘螺栓 M8x50	BOLT M8x50	8					
4	F8-05010002	精滤器接头	NIPPLE	1					
5	F8-05010003	水道盖板	EXHAUST COVER	1					
6	F8-05010004	水道盖板密封垫	GASKET, EXHAUST COVER	1					
7	GB/T5783-M6x25	六角螺栓 M6x25	BOLT M6x25	5					
8	GB/T97.1-6	平垫圈 6	WASHER 6	8					
9	F4-04000036	节温器	THERMOSTAT	1					
10	F8-05010006	节温器盖	THERMOSTAT COVER	1					
11	F8-05010005	节温器盖垫	GASKET, THERMOSTAT COVER	1					
12	GB/T5783-M6x40	六角螺栓 M6x40	BOLT M6x40	2					
13	F15-07010009	阳极密封圈	SEAL, ANODE	1					
14	F15-07010011	阳极盖板	ANODE COVER	1					
15	F15-07010008	机体阳极	ANODE	1					
16	GB/T818-M5x12	十字槽盘头螺栓 M5x12	BOLT M5x12	1					
17	GB/T97.1-5	平垫圈 5	WASHER 5	1					
18	F15-07010012	阳极止锁片	LOCKING PLATE, ANODE	1					
19	GB/T5783-M6x20	六角螺栓 M6x20	BOLT M6x20	2					
20	F8-05000900	溢流阀组件	PLUNGER	1					
21	F8-05000024	水管	HOSE	1					
22	F8-00000200	机油尺组件	OIL LEVEL GAUGE	1					
23	F8-05000800	精滤器组件	OIL STRAINER	1					
24	F8-05000017	吸油管	HOSE	1					
25	F8-05000025	卡箍	HOOP	2					
26	F15-07010005	堵塞1/4"	STOPPER 1/4"	2					
27	F15-07010004	堵塞1/8"	STOPPER 1/8"	2					
28	GB/3452.1-13.2x1.8	溢流阀O形圈 13.2x1.8	O-RING	6					
29	F8-05020001	曲轴	CRANK	1					
30	F8-05010012	曲轴油封 30x45x8	OIL SEAL	2					
31	F8-05010009	轴瓦	BUSH	4					
32	F8-05020200	连杆组件	ROD, CONNECTING	2					
33	F8-057020101	活塞	PISTON	2					
34	F8-05020105	活塞销	PIN, PISTON	2					
35	F15-07020005	活塞销挡圈	CIRCLIP	4					
36	F8-05020102	活塞环Ⅰ	PISTON RING Ⅰ	2					
37	F8-05020103	活塞环Ⅱ	PISTON RING Ⅱ	2					
38	F8-05020104	组合油环	COMBINATION OIL RING	2					
39	F8-05000000	发动机总成	ENGINE ASSY	1					
40									
41									

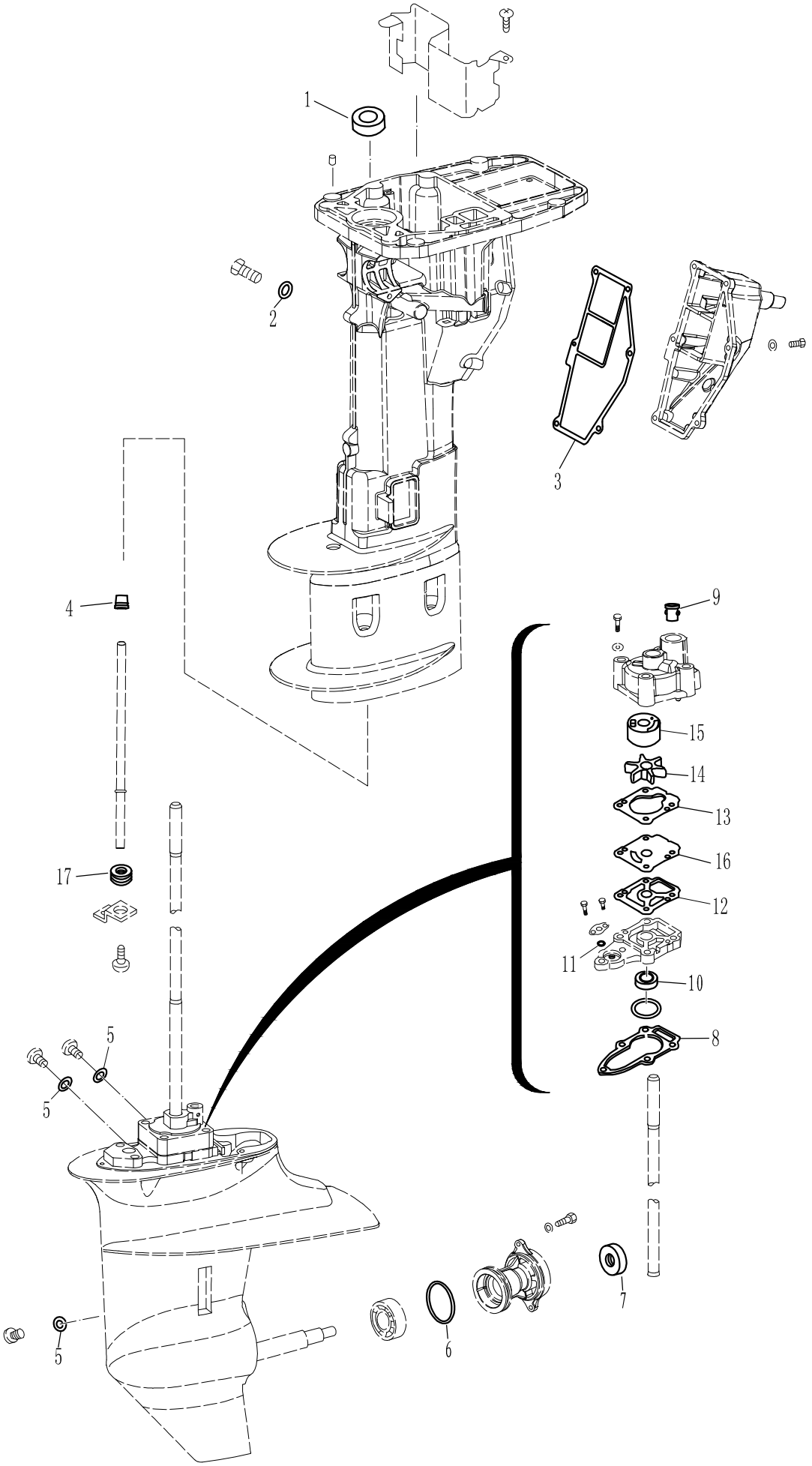
1
2
3
4
5
5
5
6
7
8
9
10
11
12
13
14
15
16
17

零部件名称: 附件Ⅰ（维修件）

PARTS NAME: APPENDIX Ⅰ (REPARE KIT)

SN. 参照号码	PART NO. 零件编号	DESCRIPTION 零件名称(中文)	DESCRIPTION 零件名称(英文)	QTY 数量					REMARKS 备注
1	F8-02000002	驱动轴油封12.1x28x5	OIL SEAL, DRIVE SHAFT	1					
2	F15-04000003	放油螺栓垫圈	GASKET	1					
3	F8-02000004	排气盖板密封垫	GASKET, EXHAUST OUTER COVER	1					
4	F8-02000007	水管上密封圈	UPPER SEAL, WATER PIPE	1					
5	F4-03000024	注油螺栓密封垫	GASKET	3					
6	F8-04040002	水下壳盖O形圈	O-RING	1					
7	F8-04040004	螺旋桨轴油封15X28X10	OIL SEAL	1					
8	F8-04000005	水泵座密封垫	WASHER	1					
9	F8-04000013	水管导向套	SEAL	1					
10	F8-04000101	水泵座油封12.1X24X8	OIL SEAL	1					
11	F2.6-03000009	O形密封圈	O-RING	1					
12	F8-04000006	外挡板下密封垫	GASKET	1					
13	F8-04000008	外挡板上密封垫	GASKET	1					
14	F8-04000200	水泵叶轮	IMPELLER	1					
15	F8-04000010	水泵内壳	INNER SHELL, WATER PUMP	1					
16	F8-04000007	外挡板	OUTER PLATE	1					
17	F8-02000008	水管下密封圈	LOWER SEAL, WATER PIPE	1					

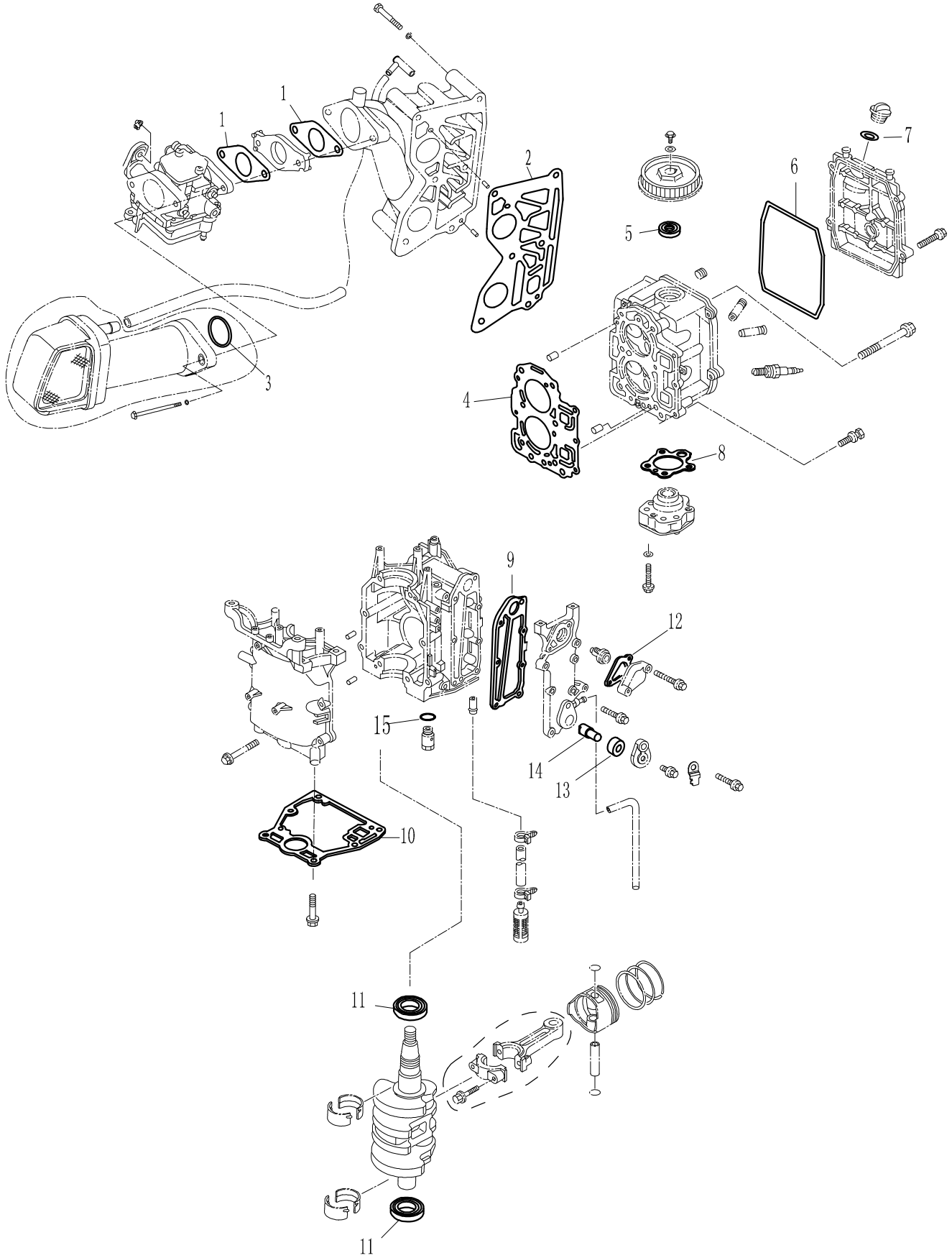
1
1
2
3
4
5
6
7
8
9
10
11
11
12
13
14
15

零部件名称: 附件Ⅱ（维修件）

PARTS NAME: APPENDIX Ⅱ(REPARE KIT)

SN. 参照号码	PART NO. 零件编号	DESCRIPTION 零件名称(中文)	DESCRIPTION 零件名称(英文)	QTY 数量					REMARKS 备注
1	F15-07000017	化油器纸垫	GASKET,CARBUERTOR	2					
2	F8-05000009	进气歧管密封垫	GASKET,MANIFOLD	1					
3	GB/T3452.1-35.5X1.8	O型圈 35.5X1.8	O-RING 35.8X1.8	1					
4	F8-05000100	气缸垫组件	CYLINDER HEAD GASKET	1					
5	F8-05030011	凸轮轴油封 18X35X7.8	OIL SEAL 18X35X7.8	1					
6	F8-05000002	缸头罩密封圈	CYLINDER HEAD COVER GASKET	1					
7	JASO F404-35-025	加油口盖密封圈	O-RING	1					
8	F8-05030012	机油泵金属密封垫	OIL PUMP GASKET	1					
9	F8-05010004	水道盖板密封垫	GASKET,EXHAUST COVER	1					
10	F8-00000004	发动机密封垫组件	GASKET ENGINE BASEMENT	1					
11	F8-05010012	曲轴油封 30x45x8	OIL SEAL	2					
12	F8-05010005	节温器盖密封垫	GASKET,THERMOSTAT	1					
13	F15-07010009	阳极密封圈	ANODE GASKET	1					
14	F15-07010008	机体阳极	ANODE	1					
15	GB/T3452.1-13.2x1.8	溢流阀O形圈13.2x1.8	O-RING 13.2x1.8	1					

零部件名称: 零件检索表

PARTS NAME: PARTS CATALOGUE INDEX

零件代号 PART NO.	页码/序号 PAGE/NO.	零件代号 PART NO.	页码/序号 PAGE/NO.	零件代号 PART NO.	页码/序号 PAGE/NO.
E4-07000001W	4-9	F15-10020000	37-6	F25-03030005BW	17-10
E4-07000002W	4-8	F15-11000001W	8-10	F25-05090100W	24-19
E4-07010002W	4-17	F15-11000002W	8-5	F25-05170201W	24-20
E4-07020015W	9-65	F15-12000001	36-14	F25-05170202W	24-9
E4-10040100W	9-55	F15-12000002	36-3	F25-05170401W	24-10
F15-00000006	26-3	F15-12000013W	9-50	F25-07000005W	16-6
F15-00000006	29-2	F15-12000016W	8-37	F25-07000006W	4-1
F15-00000012	15-14	F15-13000001W	8-36	F25-07000007W	8-30
F15-00000012	16-8	F15-13000002W	8-31	F25-07000200W	16-5
F15-01000015	13-5	F15-13000003W	8-34	F25-07000303W	4-16
F15-01010007	4-7	F15-13000004W	8-35	F25-07000304W	4-15
F15-04000002	11-25	F15-13000005W	8-8	F25-07150302W	24-17
F15-04000003	11-24	F15-13000006W	9-47	F4-01000002	2-11
F15-05000023	13-23	F15-13000007W	8-28	F4-01000003	2-18
F15-05000029	34-4	F15-13000008W	8-39	F4-01010002	2-16
F15-05000100BW	17-7	F15-13000011W	9-48	F4-01010003	2-17
F15-05030000	13-22	F15-13000012W	9-49	F4-01010004	2-14
F15-06000016	20-53	F15-13000013W	8-17	F4-01010005	2-15
F15-07000003	22-21	F15-13000014W	8-11	F4-01030103	2-48
F15-07000016W	25-6	F15-13000015W	9-51	F4-01050002	2-9
F15-07000017	25-8	F15-13000200W	8-3	F4-01090003	6-5
F15-07000018	25-9	F15-13000202W	8-15	F4-01090006	6-23
F15-07000031	29-9	F15-13000203W	8-14	F4-01090007	6-22
F15-07010004	11-2	F15-13000300W	9-44	F4-01090200	6-14
F15-07010004	29-30	F15-13000400W	8-13	F4-01090300	6-19
F15-07010005	26-13	F15-13000500W	8-27	F4-01090303	6-21
F15-07010005	29-29	F15-13000601W	8-41	F4-01090401	6-11
F15-07010008	29-15	F15-13000602W	9-45	F4-01090401	8-12
F15-07010009	29-13	F15-13000700W	8-40	F4-03000023	19-3
F15-07010011	29-14	F15-13000800W	8-33	F4-03000024	19-2
F15-07010012	29-18	F15-13000800W	17-5	F4-04000019	27-12
F15-07010101	22-20	F15-13010001W	9-56	F4-04000030	13-29
F15-07010103	22-19	F15-13010002W	9-57	F4-04000030	32-2
F15-07020005	27-7	F15-13010004W	9-62	F4-04000039	26-5
F15-07040303	30-10	F15-13010005W	9-61	F4-04000039	29-3
F15-07040304	30-9	F15-13010008W	9-63	F4-04090001	32-21
F15-07050004	26-9	F15-13010009W	9-60	F4-04090001A	32-14
F15-07060001	24-6	F15-13010010W	9-52	F4-04090002A	32-15
F15-07130105	34-15	F15-13020000W	8-24	F4-04090003	32-11
F15-07130106	34-5	F15-13020001W	8-16	F4-04090003A	32-16
F15-07130303	13-7	F15-13020002W	8-20	F4-04090004	32-12
F15-07150200W	24-12	F15-13020003W	8-21	F4-04090007	32-22
F15-07150300W	24-13	F15-13020004W	8-22	F4-04090008	32-20
F15-07150301W	24-14	F15-13020005W	8-18	F4-04090100	32-18
F15-08000004	36-6	F15-13020006W	8-9	F4-04090100A	32-13
F15-08000005	36-13	F15-13020007W	8-7	F4-04130013	34-14
F15-09000000	37-1	F15-13020100W	8-19	F4-04130100	34-11
F15-10000002	37-8	F2.6-03000009	19-11	F4-04130101	34-9
F15-10000003	37-7	F25-01010012W	4-14	F4-04130102	34-10
F15-10010000	37-3	F25-03000003	13-3	F4-05000200	13-6

零部件名称: 零件检索表

PARTS NAME: PARTS CATALOGUE INDEX

零件代号 PART NO.	页码/序号 PAGE/NO.	零件代号 PART NO.	页码/序号 PAGE/NO.	零件代号 PART NO.	页码/序号 PAGE/NO.
F4-05000300	32-9	F8-02000100	1-2	F8-04000019	20-49
F4-06000004	36-9	F8-02010001	11-8	F8-04000020	20-50
F4-08000019	36-15	F8-03000001	13-1	F8-04000021	20-44
F4-08000104	6-12	F8-03000002	13-4	F8-04000101	19-27
F4-08000105	6-15	F8-03000003	13-8	F8-04000102	19-36
F8-00000001	2-36	F8-03000004	13-2	F8-04000200	19-30
F8-00000002	2-33	F8-03000005	15-20	F8-04000301	19-33
F8-00000003	29-27	F8-03000007	13-10	F8-04000302	19-34
F8-00000004	29-26	F8-03000008	13-11	F8-04000303	19-37
F8-00000005	11-20	F8-03000010	15-6	F8-04000305	19-35
F8-00000006	11-7	F8-03000011	15-22	F8-04010000	19-39
F8-00000100	1-5	F8-03000012	13-25	F8-04020001(L)	19-23
F8-00000200	29-22	F8-03000013	15-7	F8-04020001(S)	19-23
F8-01000001	2-20	F8-03000014	13-13	F8-04030000(L)	20-43
F8-01000002	2-21	F8-03000015FW	16-2	F8-04030000(S)	20-43
F8-01000003	2-6	F8-03000021BW	17-4	F8-04040000	19-20
F8-01000100	2-22	F8-03000201	13-12	F8-04040001	19-15
F8-01010001	2-28	F8-03000202	13-9	F8-04040002	19-13
F8-01010101	2-19	F8-03010001	15-2	F8-04040003	20-57
F8-01010102	2-23	F8-03010002	15-9	F8-04040004	19-19
F8-01010103	2-44	F8-03010003	15-13	F8-04050000	20-51
F8-01010104	2-43	F8-03010005	15-5	F8-05000001	26-6
F8-01010105	2-45	F8-03010006	15-4	F8-05000002	26-7
F8-01010106	2-37	F8-03010007	15-11	F8-050000023	25-5
F8-01010107	2-41	F8-03010008	13-17	F8-05000003	34-1
F8-01010108	2-31	F8-03010100	15-1	F8-05000004	31-14
F8-01010109	2-42	F8-03020000	13-27	F8-05000005	22-14
F8-01010110	2-39	F8-04000000(L)	20-46	F8-05000006	22-15
F8-01010111	2-40	F8-04000000(S)	20-46	F8-05000007	22-13
F8-01010112	2-38	F8-04000001	19-1	F8-05000008	25-13
F8-01010200	2-8	F8-04000002-1	20-41	F8-05000009	25-15
F8-01010300	2-47	F8-04000002-2	20-41	F8-05000010	15-19
F8-01020000	2-7	F8-04000003	20-42	F8-05000012	34-2
F8-01020000FW	4-6	F8-04000004-1	19-18	F8-05000013	34-3
F8-01030100	6-1	F8-04000004-2	19-18	F8-05000014	32-8
F8-01030200	6-8	F8-04000004-3	19-18	F8-05000015	32-1
F8-02000001	11-1	F8-04000005	19-28	F8-05000017	29-24
F8-02000002	11-15	F8-04000006	19-25	F8-05000018	15-16
F8-02000003	11-16	F8-04000007	19-24	F8-05000019	15-17
F8-02000004	11-3	F8-04000008	19-29	F8-05000020	15-15
F8-02000005	11-4	F8-04000009	19-32	F8-05000021	22-12
F8-02000006(L)	11-12	F8-04000010	19-31	F8-05000022	26-4
F8-02000006(S)	11-12	F8-04000011	19-26	F8-05000024	22-1
F8-02000007	11-13	F8-04000012	19-16	F8-05000025	29-25
F8-02000008	11-11	F8-04000013	20-58	F8-05000026	29-21
F8-02000009	11-10	F8-04000014	19-14	F8-05000027W	24-18
F8-02000010	11-6	F8-04000015	19-22	F8-05000100	26-2
F8-02000011	11-21	F8-04000016	19-21	F8-05000200	22-11
F8-02000012	11-22	F8-04000017	19-4	F8-05000300	22-8
F8-02000013	11-28	F8-04000018	19-9	F8-05000400	22-17

零部件名称: 零件检索表

PARTS NAME: PARTS CATALOGUE INDEX

零件代号 PART NO.	页码/序号 PAGE/NO.	零件代号 PART NO.	页码/序号 PAGE/NO.	零件代号 PART NO.	页码/序号 PAGE/NO.
F8-05000500	22-4	F8-05040013	39-20	F8-09000700W	4-18
F8-05000600	22-3	F8-05040014	39-21	F8-09000701W	4-5
F8-05000700	25-12	F8-05040015	39-22	F8-10000000	37-2
F8-05000800	29-23	F8-05040019	39-6	F8-10000001	37-9
F8-05000900	29-20	F8-05040020	39-7	GB/3452.1-13.2x1.8	29-28
F8-05010000	29-1	F8-05040022	39-9	GB/T276-6004	19-12
F8-05010002	29-4	F8-05040023	39-11	GB/T276-6204	19-40
F8-05010003	29-5	F8-05040024	39-10	GB/T309-3X12	32-19
F8-05010004	29-6	F8-05040025	39-12	GB/T3452.1-35.5X1.8	25-4
F8-05010005	29-11	F8-05040026	39-13	PS2700.04.03	4-13
F8-05010006	29-10	F8-05040027	39-23	JASO F404 35 025	26-10
F8-05010009	27-3	F8-05040100	39-17	JASO F404 35-022	2-30
F8-05010012	27-2	F8-05040200	39-15	JASO F404-A-24-021	32-4
F8-05010014	31-11	F8-05040400	39-27	JB/T7940.1-M6	2-29
F8-05010015	31-12	F8-05040401	39-25	NGK DPR7EA-9	26-11
F8-05010016	31-13	F8-05040403	39-24	NSK FJ-1516	20-55
F8-05020001	27-1	F8-05050000	34-6	PS2700.04.03	30-3
F8-05020101	27-5	F8-05050002	34-16	T15-01000001	6-10
F8-05020102	27-8	F8-05050003	34-17	T15-01000002	6-9
F8-05020103	27-9	F8-05050004	34-18	T15-01000003	6-7
F8-05020104	27-10	F8-05050005	34-20	T15-01000004	6-4
F8-05020105	27-6	F8-05050006	34-22	T15-01000005	6-3
F8-05020200	27-4	F8-05050007	34-21	T15-01020001	6-16
F8-05020300	27-11	F8-05050008	34-24	T15-01020002	6-24
F8-05030001	30-1	F8-05050009	34-23	T15-01020003	6-6
F8-05030002	30-2	F8-05050010	34-25	T15-01020004	6-26
F8-05030004	30-4	F8-05050017	34-8	T15-02010100	2-34
F8-05030005	30-5	F8-05050018	34-19	T15-03000008	13-26
F8-05030006	30-6	F8-05050100	34-7	T15-03000012	13-24
F8-05030007	30-7	F8-05050200	34-26	T15-04000011	22-2
F8-05030008	31-1	F8-05060000	25-1	T15-13000000	8-1
F8-05030009	30-11	F8-05070000	32-3	T20-03000002	34-29
F8-05030010	30-13	F8-05070001	32-23	T3.6-04000006	31-8
F8-05030011	31-6	F8-05080000	25-11	T6-01010300	2-25
F8-05030012	31-3	F8-05090000W	24-4	T6-01010400	2-10
F8-05030014	31-10	F8-05090100W	16-9	T6-05000022	39-16
F8-05030015	30-12	F8-05090200W	24-11	T8-05040021	39-8
F8-05030100	26-1	F8-06000000	36-1	T85-08010100	8-4
F8-05030200	30-8	F8-06000001	36-2		
F8-05030300	31-2	F8-06000002	36-12		
F8-05030400	31-7	F8-06000003	36-11		
F8-05040000	25-7	F8-08000007	36-4		
F8-05040000	39-1	F8-08000008	36-4		
F8-05040002	39-2	F8-09000001W	16-7		
F8-05040005	39-18	F8-09000002W	4-11		
F8-05040007	39-19	F8-09000100W	16-1		
F8-05040008	39-5	F8-09000200W	16-4		
F8-05040009	39-3	F8-09000400W	24-24		
F8-05040010	39-4	F8-09000401W	24-25		
F8-05040012	39-14	F8-09000600W	24-1		