http://www.parsun.com.cn

PARSUN

百胜

零件目录

PARTS CATALOGUE

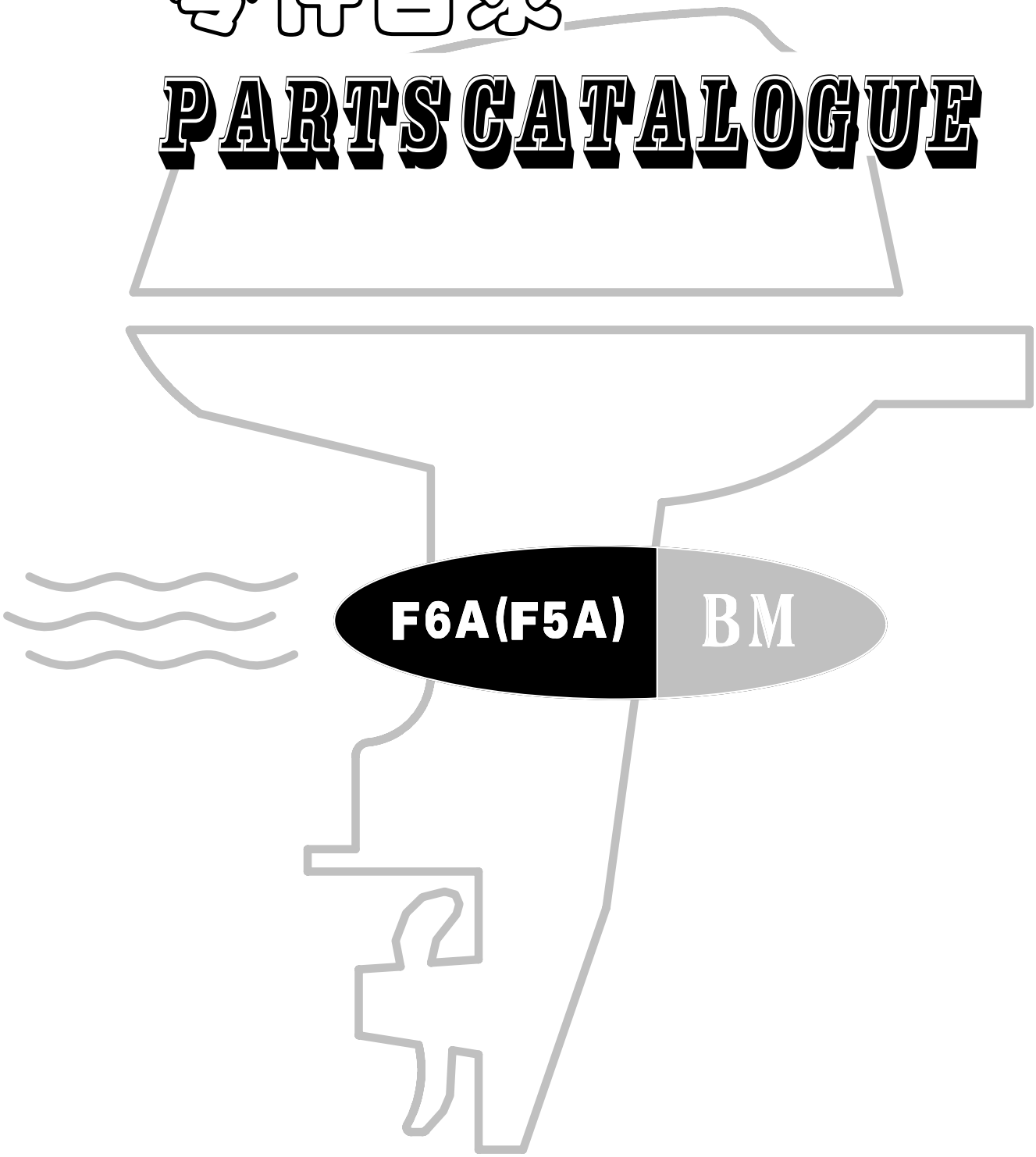

苏州百胜动力机器有限公司

SUZHOU PARSUN POWER MACHINE CO.,LTD

目录
CONTENTS

托架 — 1～2
BRACKET — 1～2
操舵系统 — 3～4
STEERING — 3～4
水上装置壳体 — 5～6
UPPER CASING — 5～6
底罩 — 7
BOTTOM COWLING — 7
控制系统 — 8～9
CONTROL SYSTEM — 8～9
水下装置壳体&驱动系统 — 10～12
LOWER CASING & DRIVE — 10～12
电气 — 13
ELECTRICAL — 13
进气系统 — 14～15
INTAKE — 14～15
气缸头 — 16～17
CYLINDER HEAD — 16～17
曲轴&活塞 — 18
CRANKSHAFT & PISTON — 18
曲轴箱 — 19～20
CRANKCASE — 19～20
凸轮轴&阀门 — 21
CAMSHAFT & VALVE — 21
内燃油箱 — 22
INNER FULE TANK — 22
燃油系统 — 23～24
FUEL SYSTEM — 23～24
起动器 — 25～26
STARTER — 25～26
顶罩组件 — 27～28
TOP COWLING ASSY — 27～28
化油器总成 — 29～30
CARBURETOR ASSY — 29～30
外燃油箱 — 31
OUTER FUEL TANK — 31
气缸头总成(修理件) — 32～33
CYLINDER HEAD ASSY(REPATE KIT) — 32～33
发动机头总成(修理件) — 34～36
ENGINE ASSY (REPARE KIT) — 34～36
附录1(修理件) — 37～38
APPENDIX 1(REPATE KIT) — 37～38
附录2(修理件) — 39～40
APPENDIX 2 (REPARE KIT) — 39～40
零件目录检索表 — Ⅰ～Ⅲ
PARTS CATALOGUE INDEX — Ⅰ～Ⅲ

零部件名称:	托架
PARTS NAME:	BRACKET

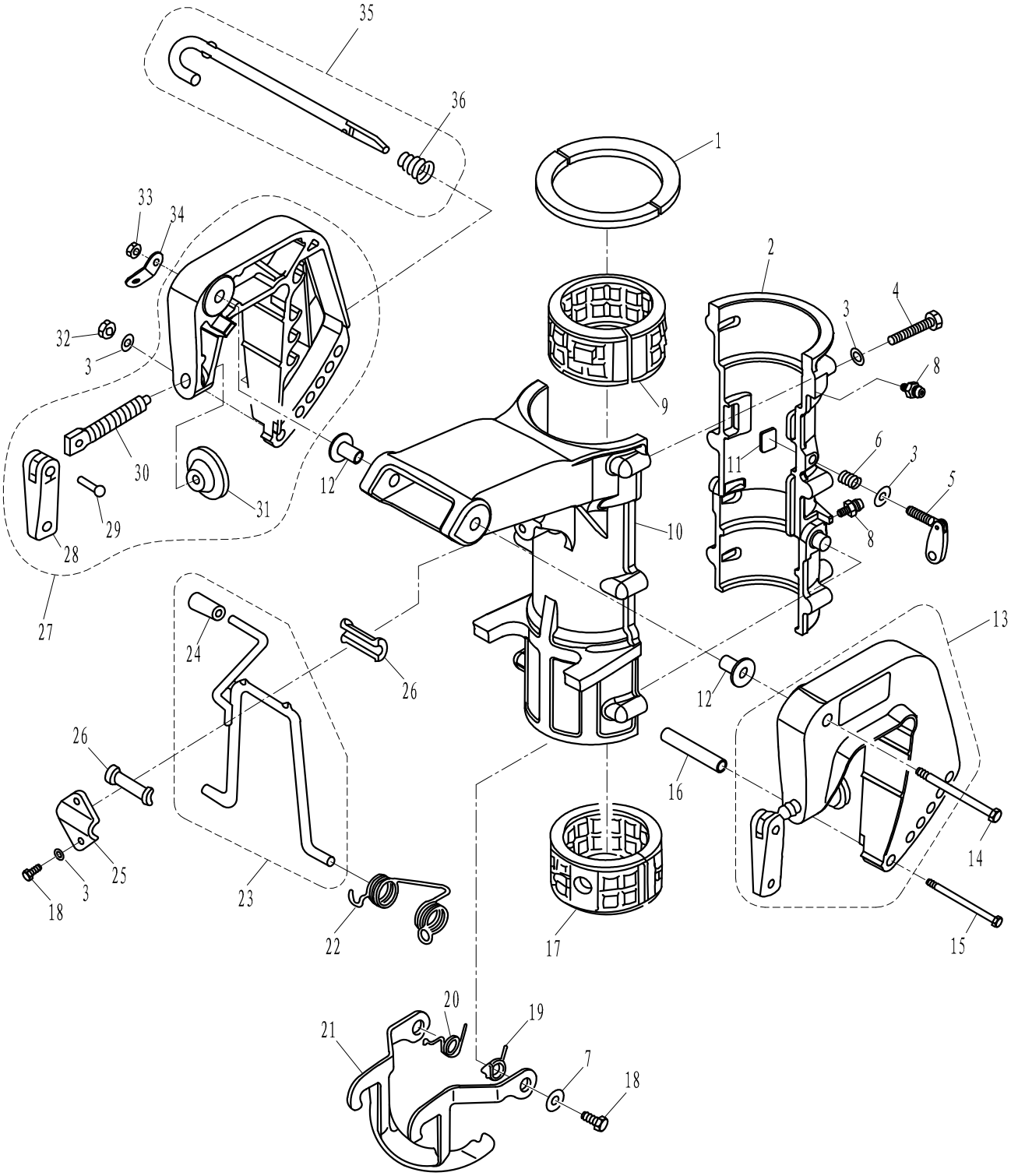

零部件名称: 托架

PARTS NAME: BRACKET

SN. 参照号码	PART NO. 零件编号	DESCRIPTION 零件名称(中文)	DESCRIPTION 零件名称(英文)	QTY 数量					REMARKS 备注
1	T5-01010003	尼龙衬管	NYLON GASKET	2					
2	F6-01010101	旋转支架盖	COVER, ROTARY BRACKET	1					
3	GB/T97.1-6	平垫圈 6	WASHER 6	10					
4	GB/T5783-M6x35	六角螺栓 M6x35	BOLT M6x35	6					
5	F2.6-01050100	锁紧手柄组件	LOCKED HANDLE ASSY	1					
6	F2.6-01050002	压缩弹簧	COMPRESS SPRING	1					
7	GB/T96-6	大垫圈6	BIG WASHER 6	3					
8	JB/T9740.1-M6	直通式压注油杯 M6	OILER M6	2					
9	T5-01010004	上减震圈	UPPER ABSORBER	1					
10	F6-01010001	旋转支架座	SEAT, ROTARY BRACKET	1					
11	T5-01010100	锁紧块组件	LOCKED BLOCK ASSY	2					
12	F4-01000003	尼龙垫圈	NYLON WASHER	2					
13	F4-01010000	夹紧托架（右）组件	CLAMP BRACKET ASSY(RIGHT)	1					
14	GB/T5782-M8x140	六角螺栓 M8x140	BOLT M8x140	1					
15	GB/T5782-M6x130	六角螺栓 M6x130	BOLT M6x130	1					
16	F8-01010001	螺栓垫管	TUBE, BOLT	1					
17	T5-01010005	下减震圈	LOWER ABSORBER	1					
18	GB/T5783-M6x12	六角螺栓 M6x12	BOLT M6x12	4					
19	T5-01010007	锁紧钩扭簧（右）	WREST SPRING(RIGHT)	1					
20	T5-01010006	锁紧钩扭簧（左）	WREST SPRING(LEFT)	1					
21	T5-01010300	起翘锁紧钩组件	LOCKED HOOK ASSY, TILT	1					
22	T5-01010002	支撑架扭簧	WREST SPRING, BRACKET	1					
23	T5-01010400	角度定位支撑架组件	SUPPORT ASSY	1					
24	F4-01030103	手柄套	HANDLE SHEATH	1					
25	F8-01010105	支撑架压板	PRESS PLATE	1					
26	F8-01010103	支撑架尼龙衬套	BUSHING, BRACKET	2					
27	F4-01020000	夹紧托架（左）组件	CLAMP BRACKET ASSY(LEFT)	1					
28	F4-01010004	艉板夹紧手柄	CLAMP HANDLE, STERN	2					
29	F4-01010005	艉板夹紧手柄铆钉	RIVET, CLAMP HANDLE	2					
30	F4-01010002	艉板夹紧螺杆	CLAMP SCREW	2					
31	F4-01010003	艉板夹紧圆盘	CLAMP PAD	2					
32	GB/T6170-M6	六角螺母 M6	NUT M6	1					
33	GB/T889.1-M8	I型非金属嵌件六角锁紧螺母M8	LOCKING NUT M8	1					
34	F4-01000002	双孔固定板	PLATE, TWO HOLE	1					
35	F8-01010200	角度调整杆组件	THRUST ROD ASSY	1					
36	F4-01050002	锥形弹簧	CONICAL SPRING	1					

零部件名称:	操舵系统
PARTS NAME:	STEERING

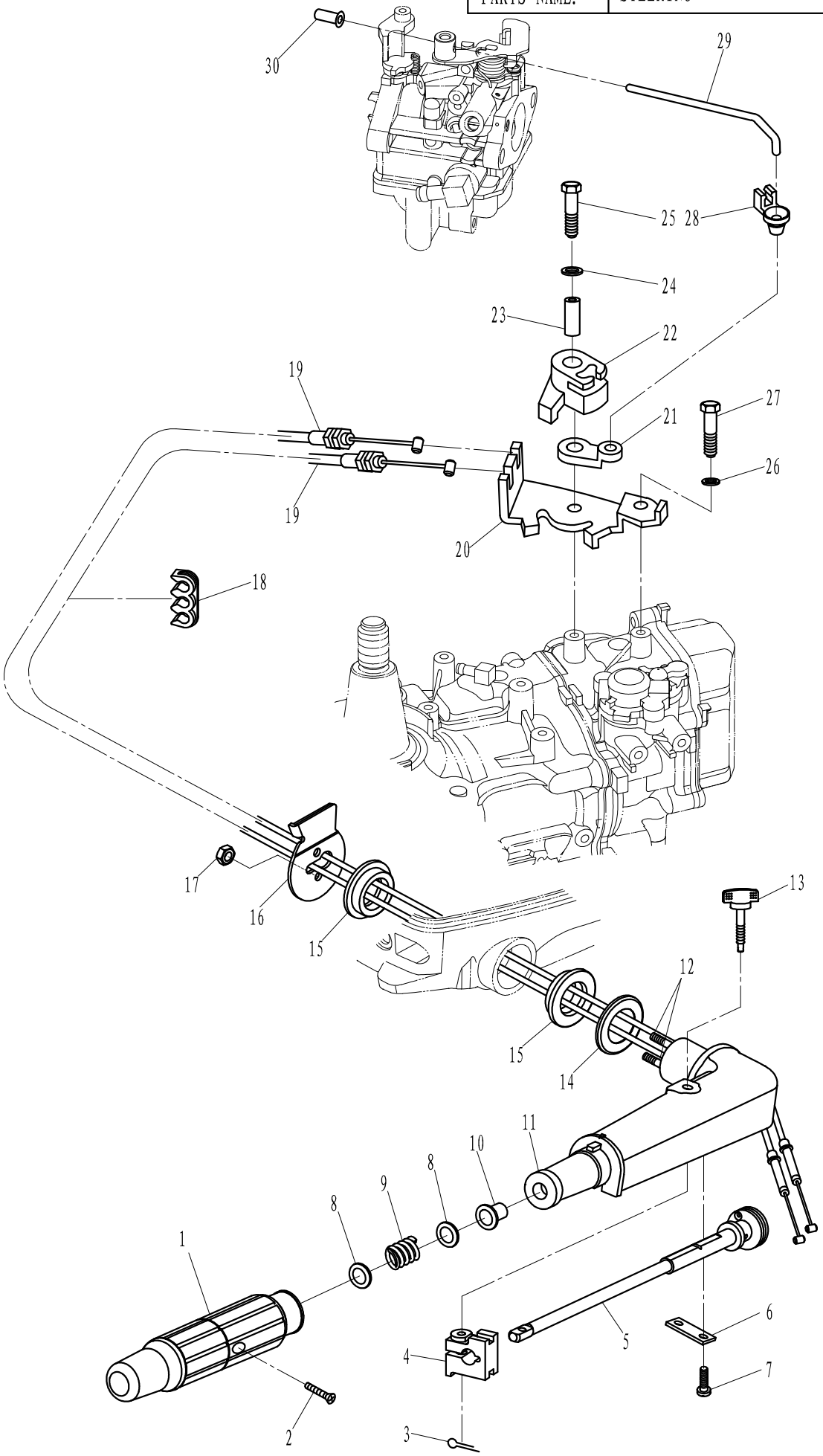

零部件名称: 操舵系统

PARTS NAME: STEERING

SN. 参照号码	PART NO. 零件编号	DESCRIPTION 零件名称(中文)	DESCRIPTION 零件名称(英文)	QTY 数量					REMARKS 备注
1	F4-01090300	操舵手柄塑胶套组件	STEERING HANDLE ASSY	1					
2	GB/T820-M5x25	十字槽半沉头螺钉M5x25	SCREW M5X25	1					
3	GB/T91-1.6X12	开口销1.6X12	COTTER PIN 1.6X12	1					
4	F4-01090003	操舵手柄握把摩擦块	FRICTION, STEERING HANDLE	1					
5	F6-01020100	节气门杆组件	LEVER, THROTTLE	1					
6	T15-01020002	节气门杆固定板	FIXED PLATE	1					
7	GB/T818-M5X12	十字槽盘头螺钉M5X12	SCREW M5X12	2					
8	GB/T848-10	小垫圈10	SMALL WASHER 10	2					
9	F4-01090007	压缩弹簧	SPRING	1					
10	F4-01090006	衬套	BUSHING	1					
11	F6-01020001	操舵手柄	STEERING HANDLE	1					
12	GB/T899-M6x14	A型双头螺柱M6x14	STUD BOLT M6X14	2					
13	F4-01090200	阻力调整旋钮组件	BOLT, FRICTION ADJUSTING	1					
14	F6-01000002	减震圈盖板	COVER	1					
15	F6-01000001	操舵手柄减震圈	BUSHING, STEERING HANDLE	2					
16	F6-01000003	操舵手柄盖板组件	STEERING HANDLE COVER ASSY	1					
17	GB/T889.1-M6	I型非金属嵌件六角锁紧螺母M6	LOCKING NUT M6	2					
18	F25-05000016	尼龙管夹	CLAMP	1					
19	F6-01020200	油门钢索组件	THROTTLE CABLE ASSY	2					
20	F6-04000022	油门执行器固定板	FIXATION PLATE, ACCELEROGRAPH	1					
21	F6-04000024	油门执行器摆杆	PULLEY, PASSIVITY	1					
22	F6-04000023	油门执行器主动滑轮	PULLEY, DRIVE	1					
23	F6-04000025	油门执行器衬管	BUSHING	1					
24	GB/T96-6	大垫圈6	BIG WASHER 6	1					
25	GB/T5783-M6X35	六角螺栓M6X35	BOLT M6X35	1					
26	GB/T97.1-6	平垫圈6	WASHER 6	1					
27	GB/T5783-M6X10	六角螺栓M6X10	BOLT M6X10	1					
28	F15-07000016	油门执行器连杆接头	JOINT, ACCELEROGRAPH CONTROL	1					
29	F6-04000027	油门连杆	LINK ROD, ACCELEROGRAPH CONTROL	1					
30	F6-04000028	连杆胶帽	RUBBER CAP	1					

零部件名称:	水上装置壳体
PARTS NAME:	UPPER CASING

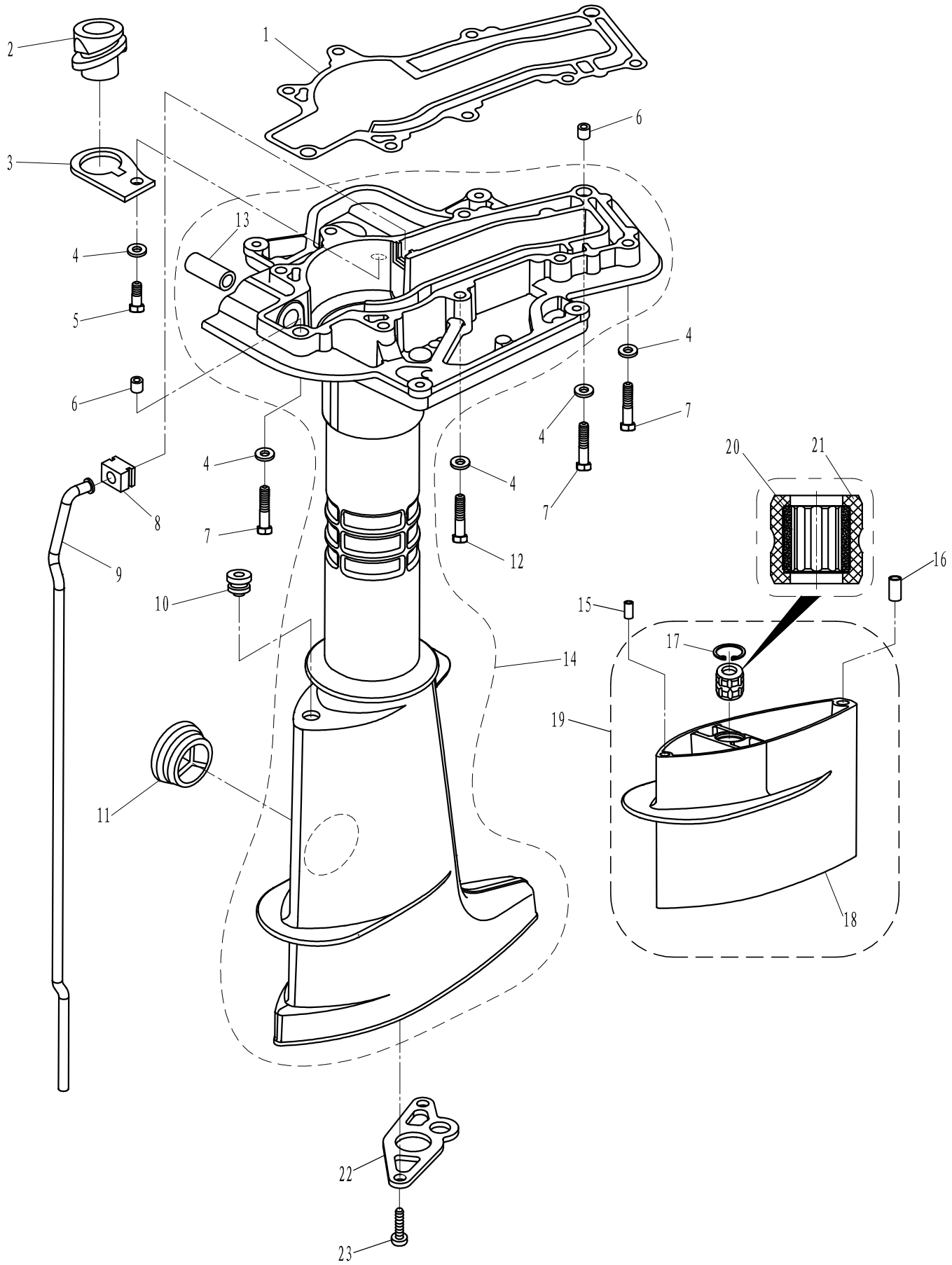

零部件名称: 水上装置壳体

PARTS NAME: UPPER CASING

SN. 参照号码	PART NO. 零件编号	DESCRIPTION 零件名称(中文)	DESCRIPTION 零件名称(英文)	QTY 数量					REMARKS 备注
1	F6-00000001	发动机密封垫	GASKET, ENGINE	1					
2	F6-02000003	放油口胶套	RUBBER SLEEVE, OIL OUTLET	1					
3	F6-02000004	胶套压板	PRESSING PLATE	1					
4	GB/T97.1-6	平垫圈6	WASHER 6	10					
5	GB/T5783-M6X14	六角螺栓M6X14	BOLT M6X14	1					
6	F4-00000001	空心定位销Ø9X6.5X10	HOLLOW PIN Ø9X6.5X10	2					
7	GB/T5782-M6X40	六角螺栓M6X40	BOLT M6X40	5					
8	F4-02040002	工形橡胶圈	RUBBER SEAL	1					
9	F6-02000001L	进水管A（长）	WATER PIPE (L)	1					
	F6-02000001S	进水管A（短）	WATER PIPE (S)	1					
10	F4-02000011	变档轴密封圈	SEAL, SHIFT ROD	1					
11	F4-02000012	水上装置橡胶堵头	RUBBER PLUG, UPPER CASING	1					
12	GB/T5782-M6X50	六角螺栓M6X50	BOLT M6X50	4					
13	F4-02000002A	水上装置壳体铜套	COPPER BUSH, UPPER CASING	1					
14	F6-02000100	水上装置壳体组件	UPPER CASING ASSY	1					
15	T5-00000001	空心定位销Ø7.5	HOLLOW PIN Ø7.5	1					
16	T5-00000002	空心定位销Ø9.5	HOLLOW PIN Ø9.5	1					
17	GB/T893.1-22	A型孔用弹性挡圈Ø22	CRICLIP 22	1					
18	T5-02010001	接长体	EXTENSION	1					
19	T5-02010000	接长体组件	EXTENSION ASSY	1					
20	T5-02010002	驱动轴衬套	BUSHING, DRIVE SHAFT	1					
21	F2.6-03020003L	驱动轴衬套橡胶套	RUBBER BUSHING	1					
22	T5-02000008	水管导向板	ORIENTED PLARTE, WATER PIPE	1					
23	GB/T818-M5X10	十字槽盘头螺钉M5X10	SCREW M5X10	2					

零部件名称:	底罩
PARTS NAME:	BOTTOM COWLING

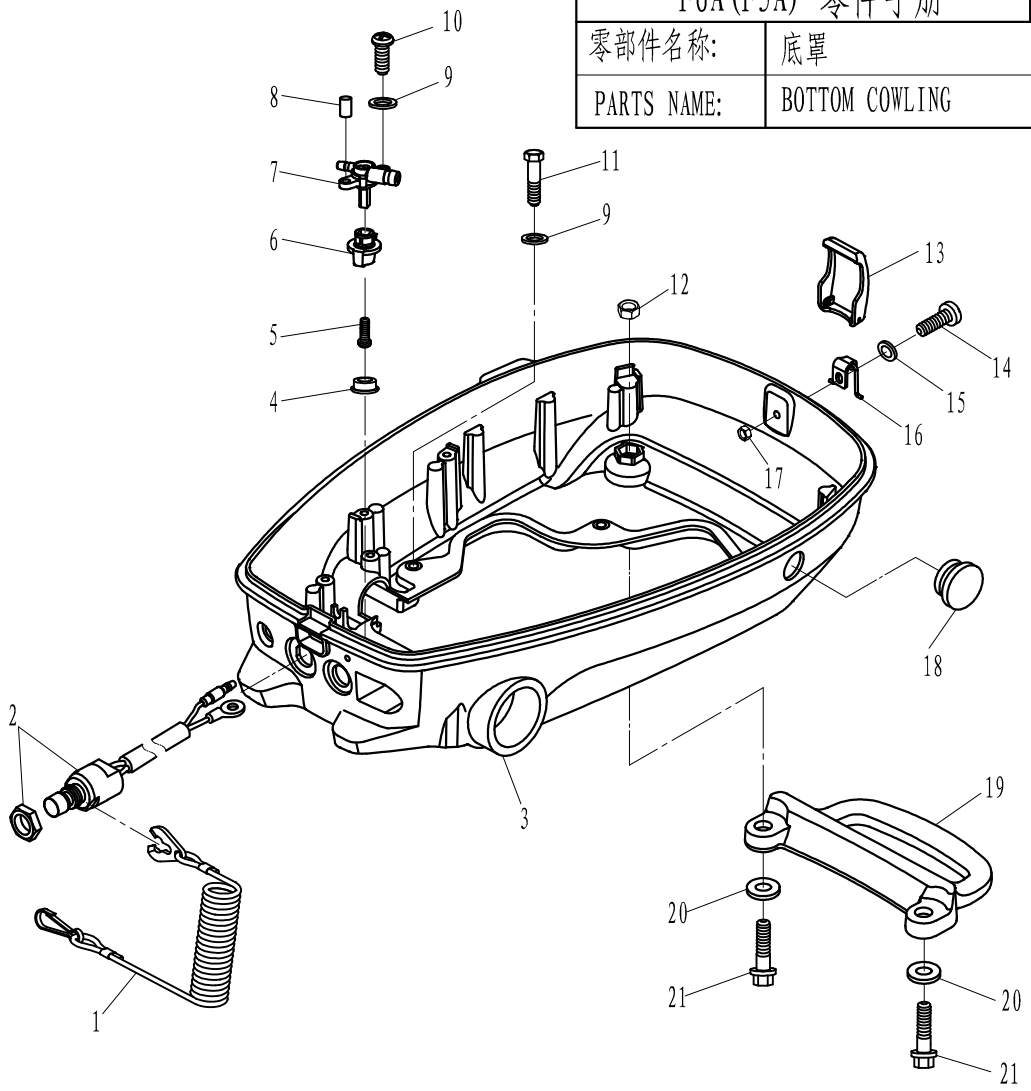

SN. 参照号码	PART NO. 零件编号	DESCRIPTION 零件名称(中文)	DESCRIPTION 零件名称(英文)	QTY 数量					REMARKS 备注
1	F4-01090401	引擎停止安全索	STOPER, HANG ROPE ASSY	1					
2	T40-01020101	急停开关组件	ENGINE STOP SWITCH ASSY	1					
3	F6-05000001	底罩	BOTTOM COWLING	1					
4	F4-05000102	旋钮堵塞	PLUG, RUBBER	1					
5	GB/T818-M4X12	十字槽盘头螺钉M4X12	SCREW M4X12	1					
6	F4-05000101	油开关旋钮	KNOP, OIL SWITCH	1					
7	F6-05000100	油开关组件	OIL SWITCH ASSY	1					
8	F15-00000006	定位销Ø6X12	PIN Ø6X12	1					
9	GB/T97.1-6	平垫圈6	WASHER 6	5					
10	GB/T818-M6X12	十字槽盘头螺钉M6X12	SCREW M6X12	1					
11	GB/T5783-M6X20	六角螺栓M6X20	BOLT M6X20	4					
12	GB/T6170-M8	六角螺母M8	NUT M8	2					
13	F4-05000023	顶罩锁紧钩	LOCKING HOOK	1					
14	GB/T818-M5x16	十字槽盘头螺钉M5x16	SCREW M5x16	1					
15	GB/T97.1-5	平垫圈5	WASHER 5	1					
16	F4-05000020	顶罩锁紧钩座组件	SEAT, LOCKING HOOK	1					
17	GB/T889.1-M5	I型非金属嵌件六角锁紧螺母M5	LOCKING NUT M5	1					
18	F4-05000013-2	橡胶闷盖B	COVER, RUBBER	1					
19	F6-05000009	手把	HANDLE	1					
20	GB/T97.1-8	平垫圈8	WASHER 8	2					
21	F25-01010303	六角凸缘螺栓M8X20	BOLT M8X20	2					

零部件名称:	控制系统
PARTS NAME:	CONTROL SYSTEM

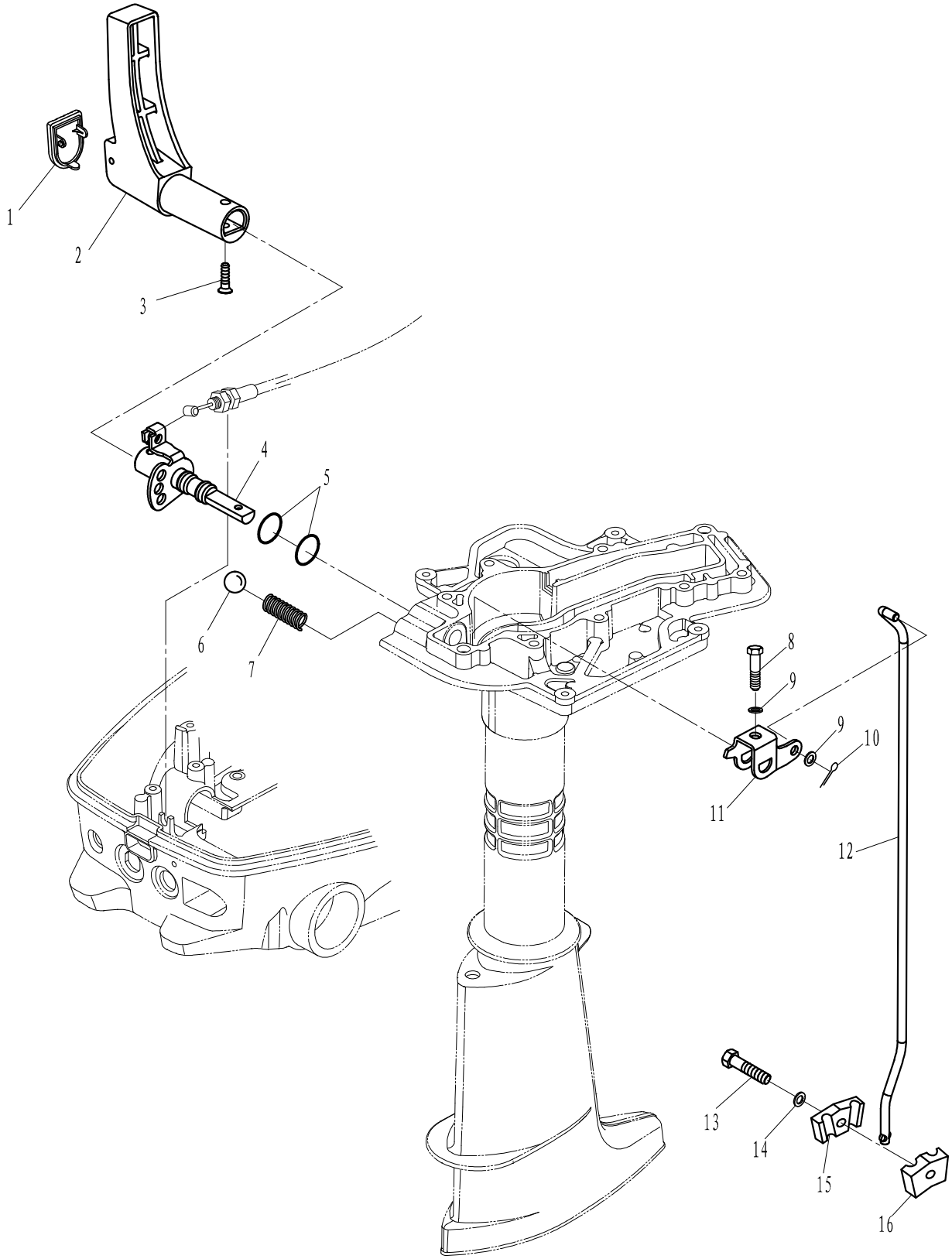

零部件名称: 控制系统

PARTS NAME: CONTROL SYSTEM

SN. 参照号码	PART NO. 零件编号	DESCRIPTION 零件名称(中文)	DESCRIPTION 零件名称(英文)	QTY 数量					REMARKS 备注
1	F6-02000005-1	变档手柄盖	COVER	1					
2	F6-02000005	变档手柄	HANDLE, GEAR SHIFT	1					
3	GB/T820-M5X20	十字槽半沉头螺钉M5X20	SCREW M5X20	1					
4	F4-02010000-B	变档拨叉组件	SHAFT, GEAR SHIFT	1					
5	JISB2401-P9	O形密封圈P9	O RING	2					
6	GB/T308-8	钢珠8	BALL 8	1					
7	F4-02000003	变档弹簧	SPRING, GEAR	1					
8	GB/T5783-M5X25	六角螺栓M5X25	BOLT M5X25	1					
9	GB/T97.1-5	平垫圈5	WASHER 5	2					
10	GB/T91-1.6X12	开口销1.6X12	PIN, COTTER 1.6X12	1					
11	F4-02000006	变档连杆支架	LEVER, SHIFT ROD	1					
12	F6-02000002	变档连杆	ROD, SHIFT	1					
13	GB/T5783-M6X20	六角螺栓M6X20	BOLT M6X20	1					
14	F4-00000005	大垫圈	BIG WASHER	1					
15	F2.6-00000001	变档连杆连接器A	CONNECTOR, SHIFT ROD "A"	1					
16	F2.6-00000002	变档连杆连接器B	CONNECTOR, SHIFT ROD "B"	1					

零部件名称:	水下装置壳体&驱动系统
PARTS NAME:	LOWER CASING & DRIVE

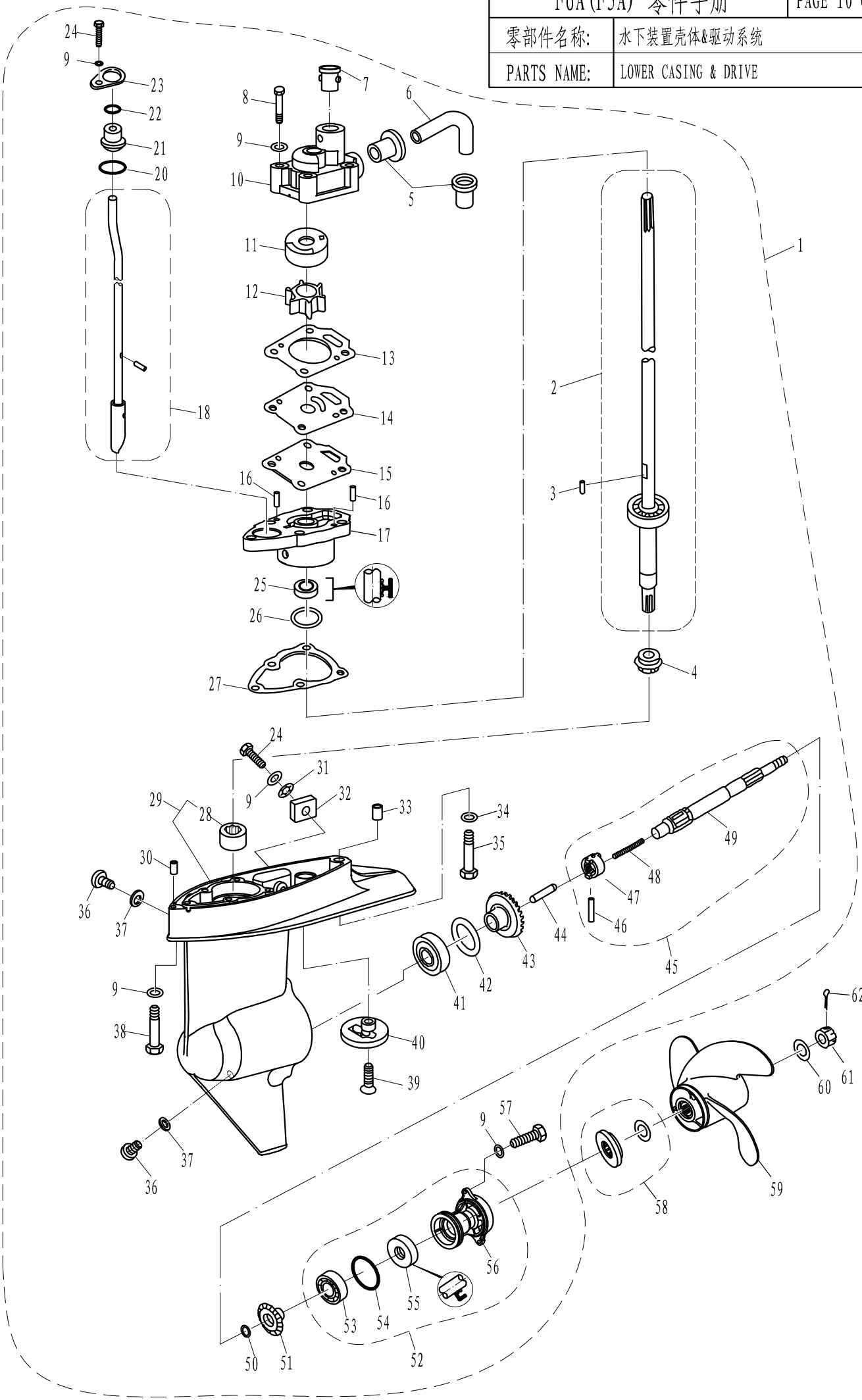

零部件名称: 水下装置壳体&驱动系统

PARTS NAME: LOWER CASING & DRIVE

SN. 参照号码	PART NO. 零件编号	DESCRIPTION 零件名称(中文)	DESCRIPTION 零件名称(英文)	QTY 数量					REMARKS 备注
1	F6-03000000L	水下装置壳体总成(L)	LOWER CASING ASSY(L)	1					L
	F6-03000000S	水下装置壳体总成(S)	LOWER CASING ASSY(S)	1					S
2	F6-03000100(L)	驱动轴组件(L)	DRIVE SHAFT ASSY(L)	1					L
	F6-03000100(S)	驱动轴组件(S)	DRIVE SHAFT ASSY(S)	1					S
3	T5-03000009	叶轮定位销	DOWEL PIN, IMPELLER	1					
4	T5-03000003	小齿轮	PINION	1					
5	T5-03000013	水管导向套A	SEAL A, WATER PIPE	2					
6	T5-03000012	进水管B	WATER PIPE B	1					
7	T5-03000014	水管导向套B	SEAL B, WATER PIPE	1					
8	GB/T5782-M6x45	六角螺栓 M6x45	BOLT M6x45	4					
9	GB/T97.1-6	平垫圈6	WASHER 6	9					
10	F6-03000001	水泵壳体	WATER PUMP	1					
11	F6-03000002	水泵内壳	INNER SHELL, WATER PUMP	1					
12	T5-03000300	水泵叶轮	IMPELLER, WATER PUMP	1					
13	F6-03000003	外挡板上密封垫	UPPER GASKET, OUTER PLATE	1					
14	T5-03000007	外挡板	OUTER PLATE	1					
15	T5-03000006	外挡板下密封垫	LOWER GASKET, OUTER PLATE	1					
16	F25-04000007	定位销Φ4x10	PIN Φ4x10	2					
17	T5-03000201	水泵座	WATER PUMP SEAT	1					
18	F6-03000200(L)	变档凸轮轴组件(L)	CAM ASSY, SHIFT ROD(L)	1					L
	F6-03000200(S)	变档凸轮轴组件(S)	CAM ASSY, SHIFT ROD(S)	1					S
19									
20	JISB2401 P16	O型圈15.8x2.4	O-RING 15.8x2.4	1					
21	T5-03000020	变档轴导向套	ORIENTED BUSHING, SHIFT ROD	1					
22	T5-03000022	导向套密封圈B	SEAL B, ORIENTED BUSHING	1					
23	T5-03000023	导向套固定板	PLATE, ORIENTED BUSHING	1					
24	GB/T5783-M6x16	六角螺栓 M6x16	BOLT M6x16	2					
25	T5-03000202	水泵座油封	OIL SEAL, WATER PUMP SEAT	1					
26	T5-03000004-1	驱动轴填隙片 0.10mm	SHIM 0.10mm						
	T5-03000004-2	驱动轴填隙片 0.15mm	SHIM 0.15mm						
27	T5-03000005	水泵座密封垫	GASKET, WATER PUMP SEAT	1					
28	TLA1412Z	滚针轴承	NEEDLE BEARING	1					
29	T5-03000700	水下装置壳体组件	LOWER CASING ASSY	1					
30	T5-00000001	空心定位销Φ7.5x10	HOLLOW PIN Φ7.5x10	1					
31	GB/T861.1-6	内齿锁紧垫圈6	LOCK WASHER 6	1					
32	T5-03000017	水下阳极	ANODE	1					
33	T5-00000002	空心定位销Φ9.5x10	HOLLOW PIN Φ9.5x10	1					
34	GB/T97.1-8	平垫圈 8	WASHER 8	1					
35	GB/T5782-M8x40	六角螺栓 M8x40	BOLT M8x40	1					S
	GB/T5782-M8x167	六角螺栓 M8x167	BOLT M8x167	1					L
36	F4-03000023	注油孔螺栓	PLUG, OIL HOSE	2					
37	F4-03000024	注油孔螺栓密封垫	GASKET	2					
38	GB/T5782-M6x45	六角螺栓 M6x45	BOLT M6x45	1					S

零部件名称: 水下装置壳体&驱动系统

PARTS NAME: LOWER CASING & DRIVE

SN. 参照号码	PART NO. 零件编号	DESCRIPTION 零件名称(中文)	DESCRIPTION 零件名称(英文)	QTY 数量					REMARKS 备注
	GB/T5782-M6x172	六角螺栓 M6x172	BOLT M6x172	1					L
39	GB/T820-M6x20	十字槽半沉头螺钉 M6x20	SCREW M6x20	1					
40	T5-03000016	进水口	WATER INLET	1					
41	GB/T276-6004	深沟球轴承 6004	BEARING 6004	1					
42	F8-04000002-1	正档齿轮填隙片 0.10mm	SHIM 0.10mm						
	F8-04000002-2	正档齿轮填隙片 0.15mm	SHIM 0.15mm						
43	T5-03010000	正档齿轮组件	FORWARD GEAR ASSY	1					
44	T5-03000404	离合器销	PIN, CLUTCH	1					
45	T5-03000400	螺旋桨轴组件	SHAFT ASSY, PROPELLER	1					
46	GB/T879.1-3.5x28	重型直槽弹性圆柱销 3.5x28	PIN 3.5x28	1					
47	T5-03000403	爪形离合器	CLUTCH, DOG	1					
48	T5-03000402	离合器弹簧	SPRING, CLUTCH	1					
49	T5-03000401	螺旋桨轴	SHAFT, PROPELLER	1					
50	T5-03000015	倒档齿轮垫圈	WASHER, REVERSE GEAR	1					
51	T5-03000600	倒档齿轮组件	REVERSE GEAR ASSY	1					
52	T5-03000500	水下装置壳体盖组件	COVER ASSY, LOWER CASING	1					
53	GB/T276-6002	深沟球轴承6002	BEARING 6002	1					
54	JASOF404 31-050	O形圈 50x3.1	O-RING	1					
55	F8-04040004	螺旋桨轴油封15x28x10	OIL SEAL	1					
56	T5-03000501	水下装置壳体盖	COVER, LOWER CASING	1					
57	GB/T5783-M6x20	六角螺栓 M6x20	BOLT M6x20	2					
58	T5-03000800	螺旋桨轴垫块组件	CUSHION ASSY, PROPELLER SHAFT	1					
59	F6-03010000	螺旋桨组件 3-7.8"x9"	PROPELLER ASSY 3-7.8"x9"	1					
	F5-03030000	螺旋桨组件 3-7.8"x8"	PROPELLER ASSY 3-7.8"x8"	1					
60	GB/T96-10	大垫圈 10	WASHER 10	1					
61	F15-06000016	开槽六角螺母	NOTCH NUT	1					
62	GB/T91-3.2x18	开口销 ϕ3.2x18	PIN, COTTER ϕ3.2x18	1					

零部件名称:	电气
PARTS NAME:	ELECTRICAL

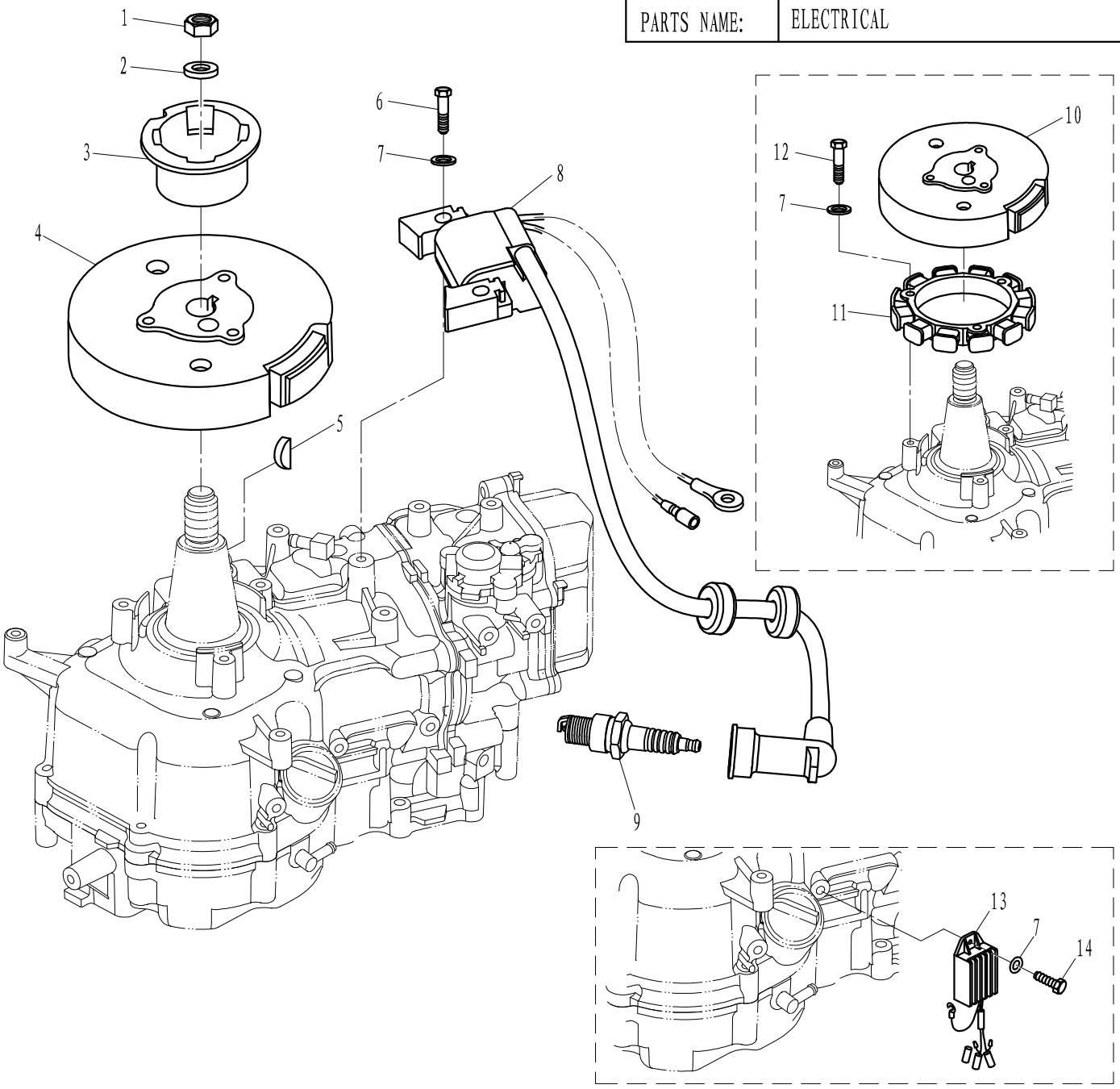

SN. 参照号码	PART NO. 零件编号	DESCRIPTION 零件名称(中文)	DESCRIPTION 零件名称(英文)	QTY 数量					REMARKS 备注
1	F8-05000024	飞轮螺母	NUT, FLYWHELL	1					
2	T15-04000011	飞轮垫圈	WAHSER, FLYWHELL	1					
3	F6-04000029A	起动轴套	PULLEY, STANTER	1					
4	F6-04000500	飞轮组件	FLYWHELL ASSY	1					
5	F4-04000019	半圆键	KEY	1					
6	GB/T5783-M6X25	六角螺栓M6X25	BOLT M6X25	2					
7	GB/T97.1-6	平垫圈6	WASHER 6	6					
8	F6-04000400	高压包组件	IGNITION COIL ASSY	1					
9	NGK CR6HSA	火花塞	SPARK PLUG	1					
10	F6-04000700A	飞轮组件	FLYWHEEL ASSY	1					
11	F6-04000800A	磁电机线圈组件	STATOR ASSY	1					LIGHTING COIL
12	GB/T5783-M6X30	六角螺栓M6X30	BOLT M6X30	3					
13	F15-07060001	整流器组件	RECTIFIER & REGULATOR ASSY	1					LIGHTING COIL
14	GB/T5783-M6X12	六角螺栓M6X12	BOLT M6X12	1					

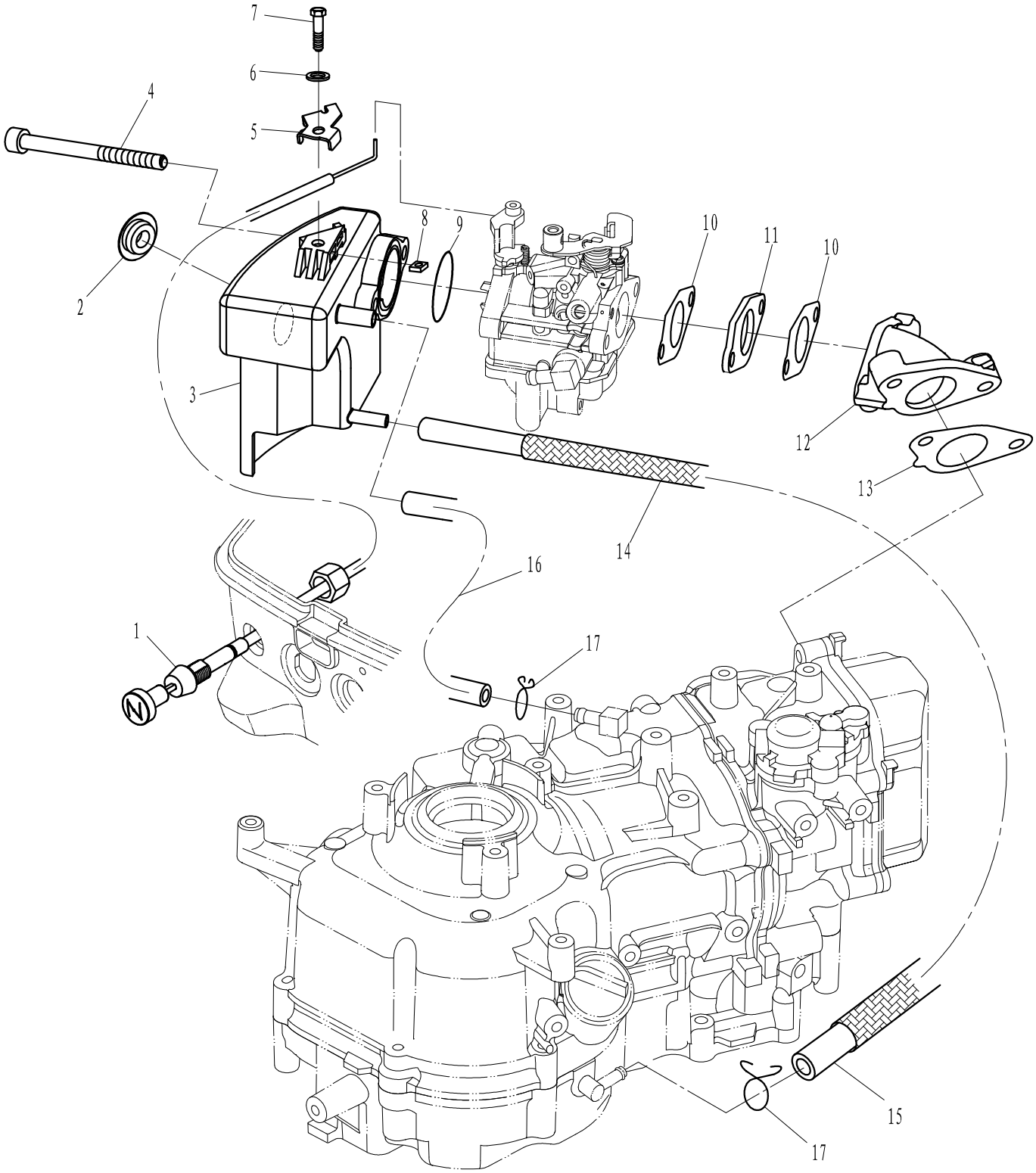
7
6
5
4
2
3
8
9
10
11
10
12
13
14
16
1
17
15
17

零部件名称: 进气系统

PARTS NAME: INTAKE

SN. 参照号码	PART NO. 零件编号	DESCRIPTION 零件名称(中文)	DESCRIPTION 零件名称(英文)	QTY 数量					REMARKS 备注
1	F6-05000200	阻风门拉柄组件	AIR CHOKE HANDLE ASSY	1					
2	F4-04110003	消音器堵塞	PLUG, INTAKE SILENCE	1					
3	F6-04000200	进气消音器组件	INTAKE SILENCE ASSY	1					
4	GB/T70.1-M6X85	内六角螺栓M6X85	BOLT M6X85	2					
5	F6-04000014	阻风门压板	PRESSING PLATE	1					
6	GB/T97.1-5	平垫圈5	WASHER 5	1					
7	GB/T5783-M5X10	六角螺栓M5X10	BOLT M5X10	1					
8	GB/T39-M5	方螺母M5	SQUARE NUT M5	1					
9	GB/T3452-31.5X1.8	进气消音器O形圈	O RING	1					
10	F6-04000012	化油器密封垫	GASKET, CARBURETOR	2					
11	F6-04000013	化油器密封垫块	GASKET, CARBURETOR	1					
12	F6-04000011	进气歧管	MANIFOLD, INTAKE	1					
13	F6-04000010	进气歧管密封垫	GASKET, INTAKE MANIFOLD	1					
14	F6-04000302	回油管护套	JACKET, RETURN OIL PIPE	1					
15	F6-04000301	回油管Ø5XØ10X420	PIPE, RETURN OIL	1					
16	F6-04000019	回油管BØ6XØ11X85	PIPE "B", RETURN OIL	1					
17	F4-04000030	油管夹簧B	CLIP "B", FUEL PIPE	2					

零部件名称:	气缸头
PARTS NAME:	CYLINDER HEAD

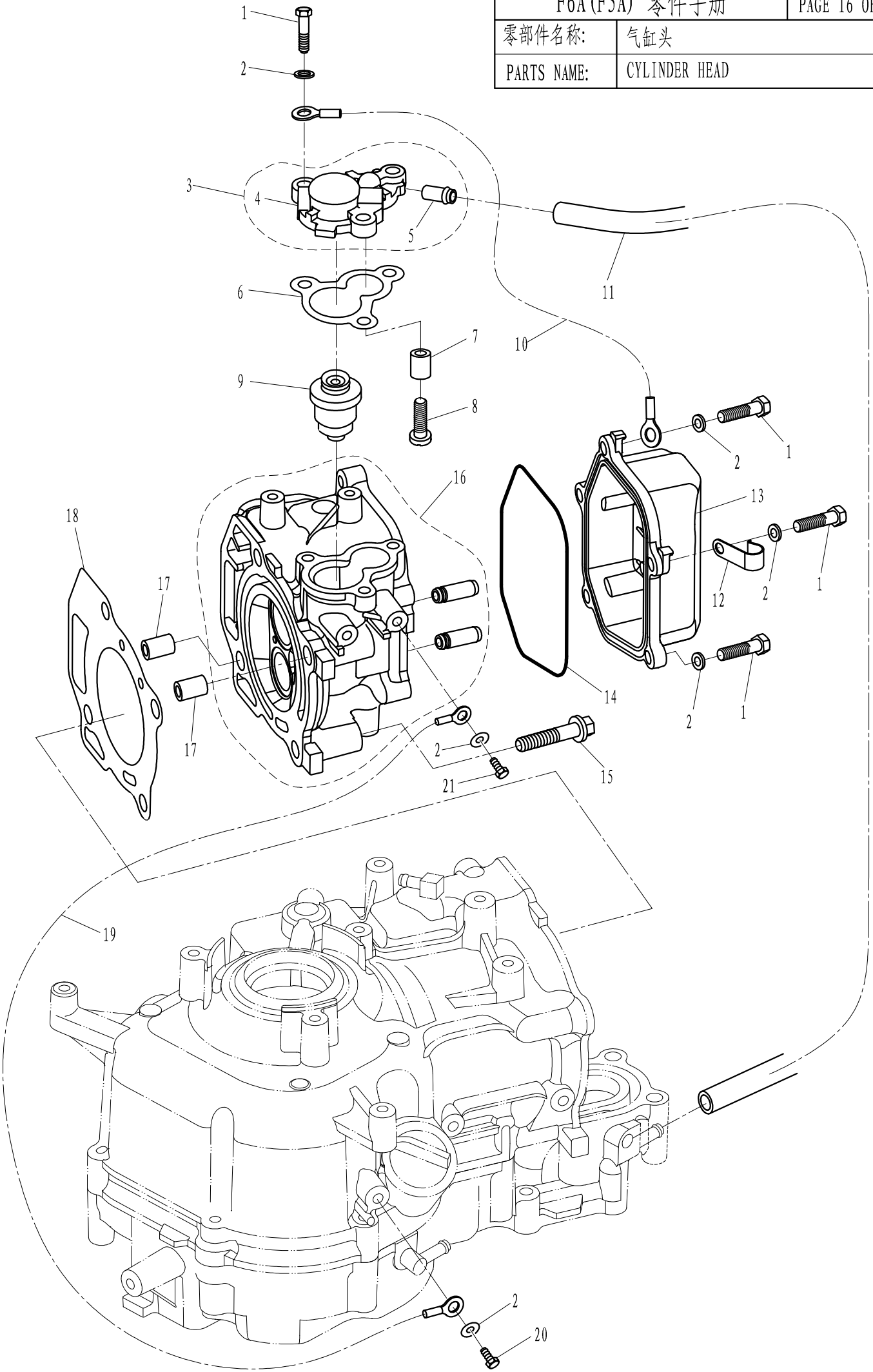

零部件名称: 气缸头

PARTS NAME: CYLINDER HEAD

SN. 参照号码	PART NO. 零件编号	DESCRIPTION 零件名称(中文)	DESCRIPTION 零件名称(英文)	QTY 数量					REMARKS 备注
1	GB/T5783-M6X20	六角螺栓M6X20	BOLT M6X20	8					
2	GB/T97.1-6	平垫圈6	WASHER 6	10					
3	F4-04070000	节温器盖组件	THERMOSTAT COVER ASSY	1					
4	F4-04070001	节温器盖	COVER, THERMOSTAT	1					
5	F4-04010102	气嘴	NOZZLE	1					
6	F4-04000011	节温器盖密封垫	GASKET, THEMOSTAT COVER	1					
7	F4-04070003	节温器盖阳极	ANODE, THEMOSTAT COVER	1					
8	GB/T818-M5X25	十字槽盘头螺钉M5X25	SCREW M5X25	1					
9	F15-07000031	节温器（S60）	THEMOSTAT (S60)	1					
10	F6-04000009	接地导线	WIRE, LEAD	1					
11	F6-04000020	回水管Ø5XØ10X250	PIPE, RETURN WATER	1					
12	T36-04000023	线卡	CLAMP	1					
13	F6-04000004	缸头罩	COVER, CYLINDER HEAD	1					
14	F6-04000005	缸头罩密封圈	SEAL RING	1					
15	F4-04000034	气缸头螺栓	BOLT, CYLINDER HEAD	4					
16	F6-04050100	气缸头组件	CYLINDER HEAD ASSY	1					
17	F4-04000003	空心定位销Ø10X8.4X14	HOLLOW PIN Ø10X8.4X14	2					
18	F6-04000002	缸头复合垫	GASKET, CYLINDER HEAD	1					
19	F6-04000021	接地导线B	WIRE, LEAD	1					
20	GB/T5783-M6x12	六角螺栓M6x12	BOLT M6x12	2					

零部件名称:	曲轴 & 活塞
PARTS NAME:	CRANKSHAFT & PISTON

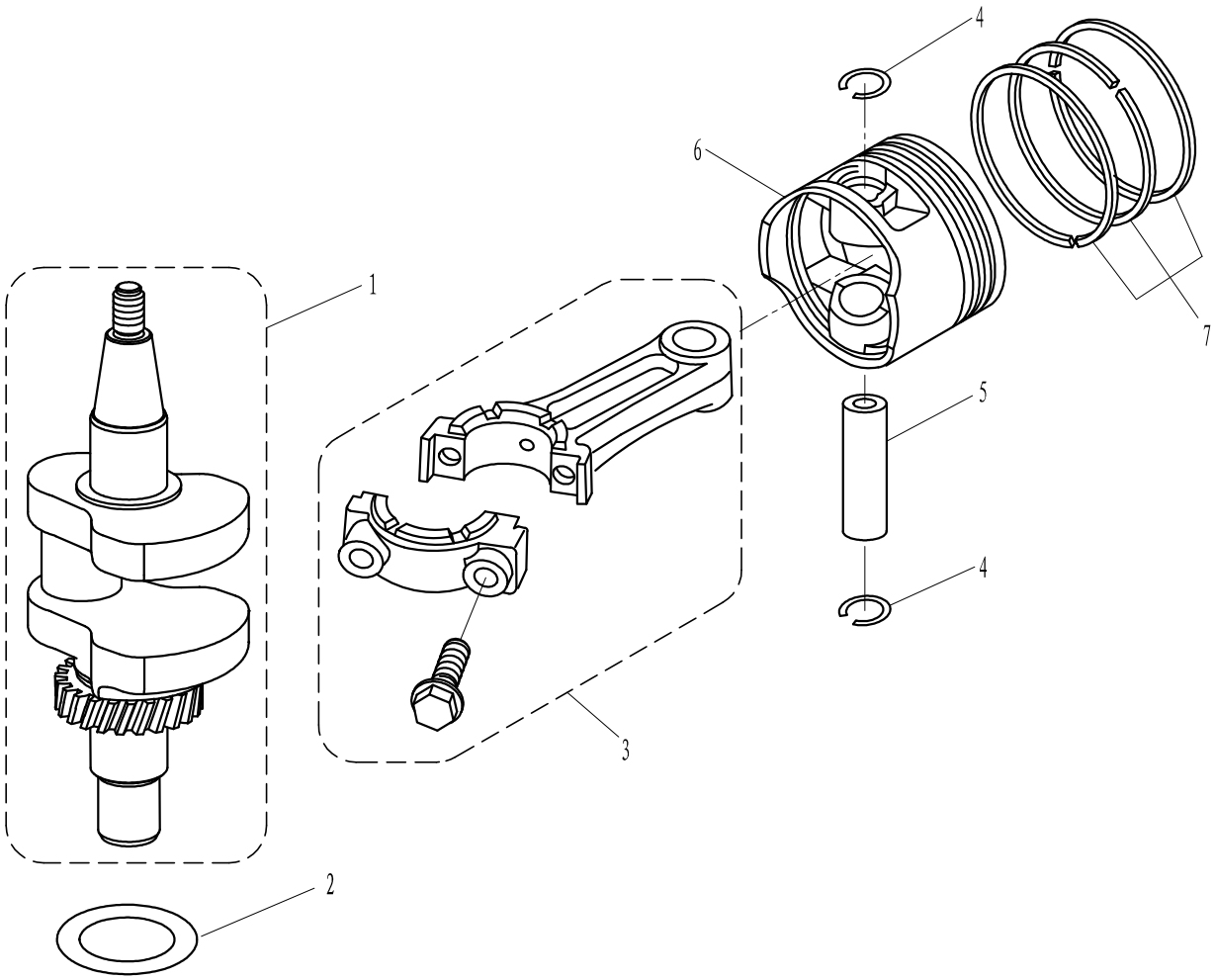

SN. 参照号码	PART NO. 零件编号	DESCRIPTION 零件名称(中文)	DESCRIPTION 零件名称(英文)	QTY 数量					REMARKS 备注
1	F6-04000100	曲轴组件	CRANK ASSY	1					
2	F4-04000004	箱盖减磨圈	WASHER	1					
3	F6-04020100	连杆组件	ROD, CONNECTING	1					
4	F6-04020004	活塞销卡簧	CIRCLIP	2					
5	F6-04020003	活塞销	PIN, PISTON	1					
6	F6-04020001	活塞	PISTON	1					
7	F6-04020002	活塞环组件	PISTON RING ASSY	1					

零部件名称:	曲轴箱
PARTS NAME:	CRANK CASE

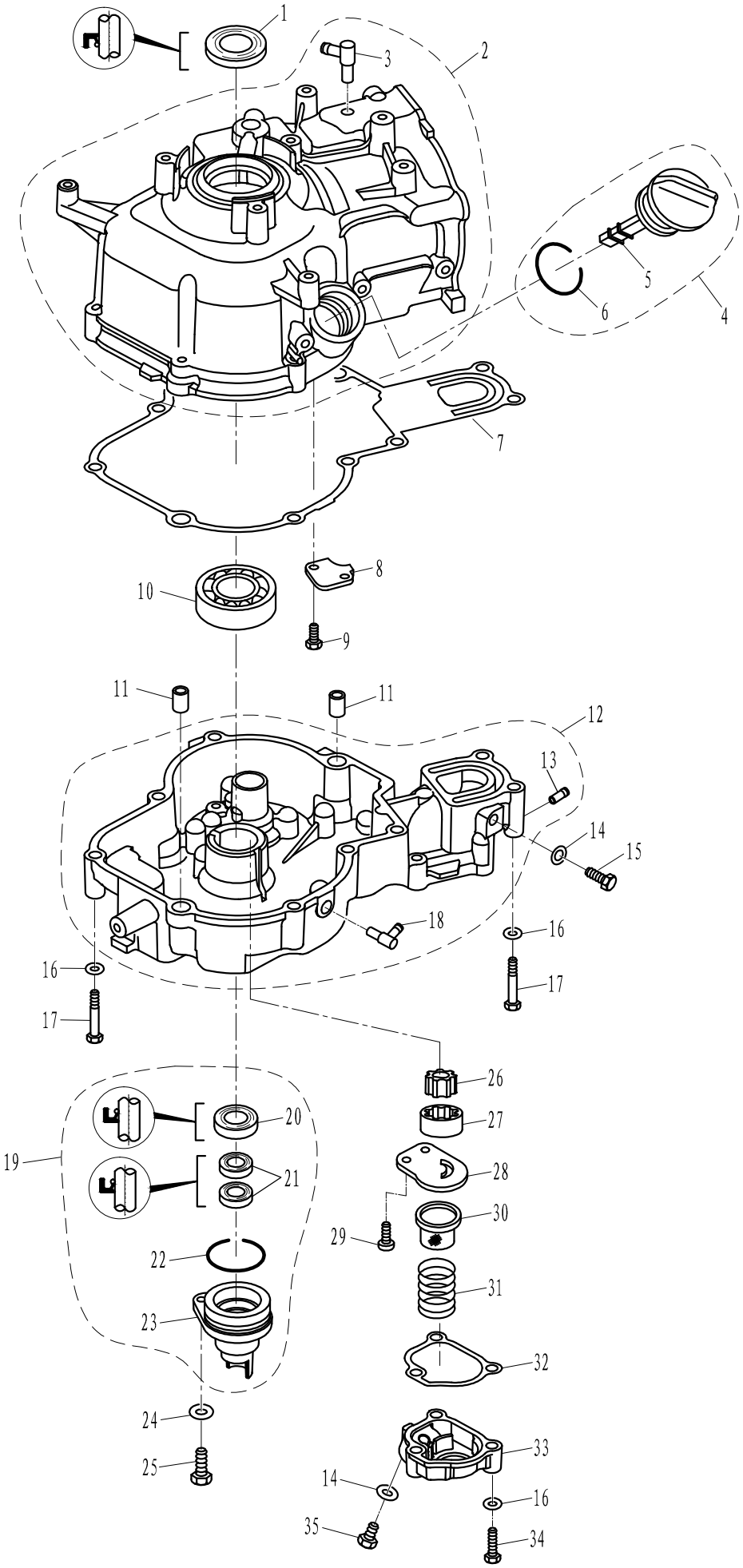

零部件名称: 曲轴箱

PARTS NAME: CRANKCASE

SN. 参照号码	PART NO. 零件编号	DESCRIPTION 零件名称(中文)	DESCRIPTION 零件名称(英文)	QTY 数量					REMARKS 备注
1	F4-04010004	曲轴油封A 25x40x5	OIL SEAL	1					
2	F6-04010100	曲轴箱体组件	CRANK CASE ASSY	1					
3	F8-05000700	气嘴组件	GAS NIPPLE ASSY	1					
4	F4-04000036	带尺机油盖组件	PLUG WITH DIPSTICK ASSY	1					
5	F4-04000007	带尺机油盖	PLUG WITH DIPSTICK	1					
6	F4-04000008	机油盖阻油圈	O-RING	1					
7	F6-04000001	曲轴箱体复合垫	COMPLEX GASKET,CRANKCASE	1					
8	F6-04010004	挡油板	OIL BAFFLE PLATE	1					
9	GB/T5783-M5x10	六角螺栓 M5x10	BOLT M5x10	2					
10	NTN 6205C3	深沟球轴承6205C3	BEARING 6205C3	1					
11	F4-04000003	空心定位销 φ10x8.4x14	HOLLOW PIN φ10x8.4x14	2					
12	F6-04040100	曲轴箱盖组件	COVER,CRANK CASE	1					
13	F4-04010102	气嘴	GAS NIPPLE	1					
14	F4-04000006	放油螺栓密封垫	WASHER	2					
15	GB/T5783-M8x14	六角螺栓 M8x14	BOLT M8x14	1					
16	GB/T97.1-6	平垫圈 6	WASHER 6	13					
17	T6-05000021	发动机螺栓 M6x50	BOLT M6x50	10					
18	F15-04000005	水嘴	WATER NIPPLE	1					
19	F6-04080000	油封壳体组件	OIL SEAL SHELL ASSY	1					
20	F2.6-04010001	曲轴油封(B) 20x30x7	OIL SEAL 20x30x7	1					
21	F6-04080001	驱动轴上油封 10.1x21x7	OIL SEAL 10.1x21x7	2					
22	F4-04060002	O形圈φ32.5xφ1.8	O RING φ32.5xφ1.8	1					
23	F4-04060001	油封壳体	SHELL,OIL SEAL	1					
24	GB/T97.1-8	平垫圈 8	WASHER 8	1					
25	GB/T5783-M8x20	六角螺栓 M8x20	BOLT M8x20	1					
26	F6-04040002	机油泵内转子	INNER ROTOR,OIL PUMP	1					
27	F6-04040003	机油泵外转子	OUTER ROTOR,OIL PUMP	1					
28	F6-04040004	油泵盖板	COVER BOARD,OIL PUMP	1					
29	GB/T818-M6x10	十字槽盘头螺栓 M6x10	BOLT M6x10	2					
30	F6-04040006	油泵滤网	STRAINER,OIL PUMP	1					
31	F6-04040007	油泵弹簧	SPRING,OIL PUMP	1					
32	F6-04040005	油泵密封垫	GASKET,OIL PUMP	1					
33	F6-04040008	油泵盖	COVER,OIL PUMP	1					
34	GB/T5783-M6x35	六角螺栓 M6x35	BOLT M6x35	3					
35	F6-04040009	放油螺栓	BOLT	1					

零部件名称:	凸轮轴 & 阀门
PARTS NAME:	CAMSHAFT & VALVE

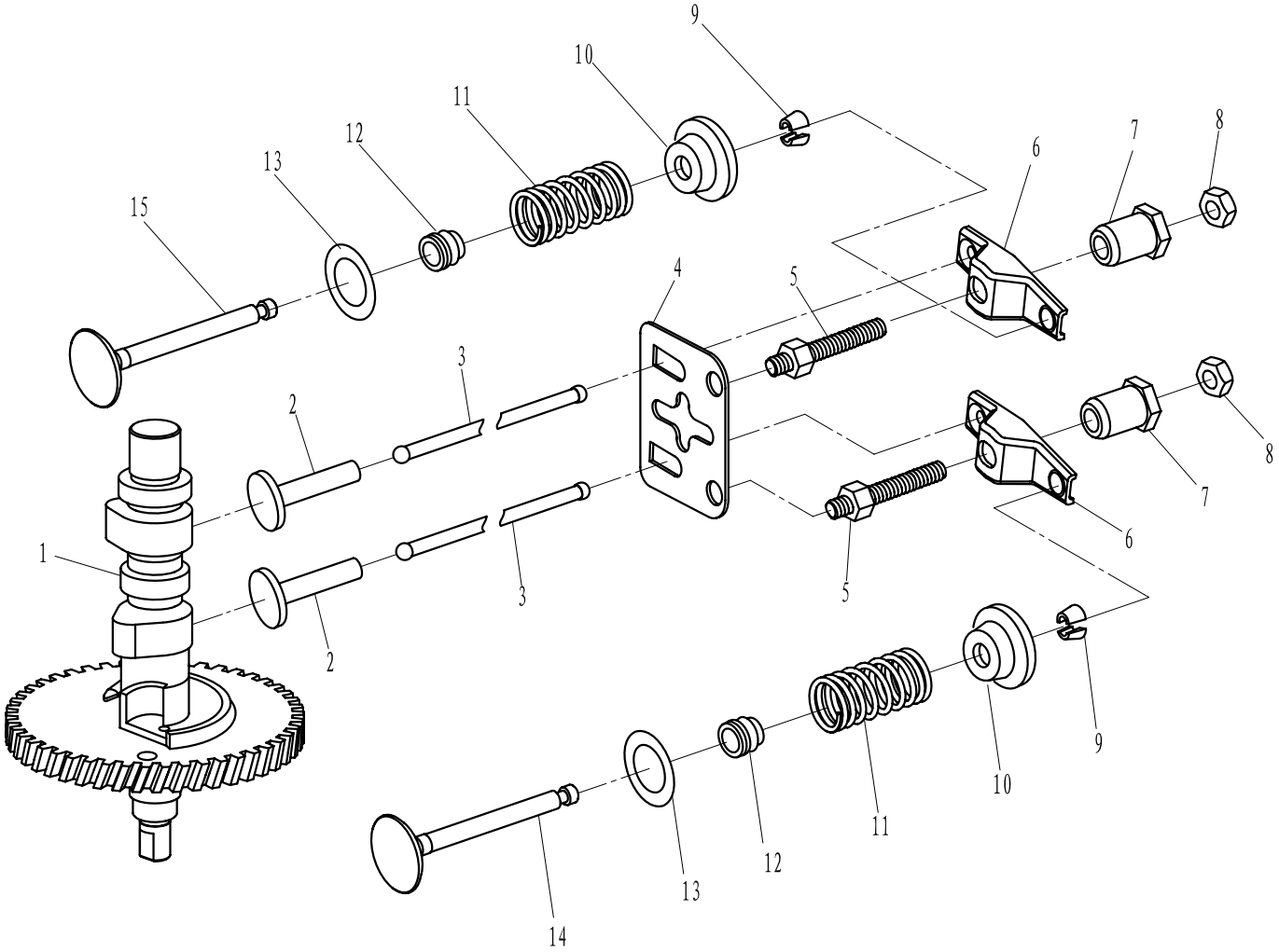

SN. 参照号码	PART NO. 零件编号	DESCRIPTION 零件名称(中文)	DESCRIPTION 零件名称(英文)	QTY 数量					REMARKS 备注
1	F6-04030000	凸轮减压组件	CAMSHAFT ASSY	1					
2	166F-000001	气门挺柱	LIFTER, VALVE	2					
3	F6-04000003	气门推杆	ROD, VALVE PUSH	2					
4	F6-04050004	导向板	PLATE, PUSH ROD	1					
5	166F-010008	摇臂螺杆	BOLT, ROCKER ARM	2					
6	166F-010009	摇臂	ARM, VALVE ROCKER	2					
7	166F-010010	摇臂球座	PIVOT, ROCKER ARM	2					
8	166F-010011	锁紧螺母M6X0.75	LOCKNUT M6X0.75	2					
9	F8-05030007	气门锁夹	CLAMP, VALVE	4					
10	F8-05030006	气门弹簧座圈	SEAT, VALVE SPRING	2					
11	F6-04050003	气门弹簧	SPRING, VALVE	2					
12	166F-010003	气门油封	OIL SEAL, VALVE	2					
13	F4-04080007	气门弹簧垫圈	WASHER, VALVE SPRING	2					
14	F6-04050002	排气门	DOOR, EXHAUST	1					
15	F6-04050001	进气门	DOOR, INTAKE	1					

零部件名称:	内燃油箱
PARTS NAME:	INNER FUEL TANK

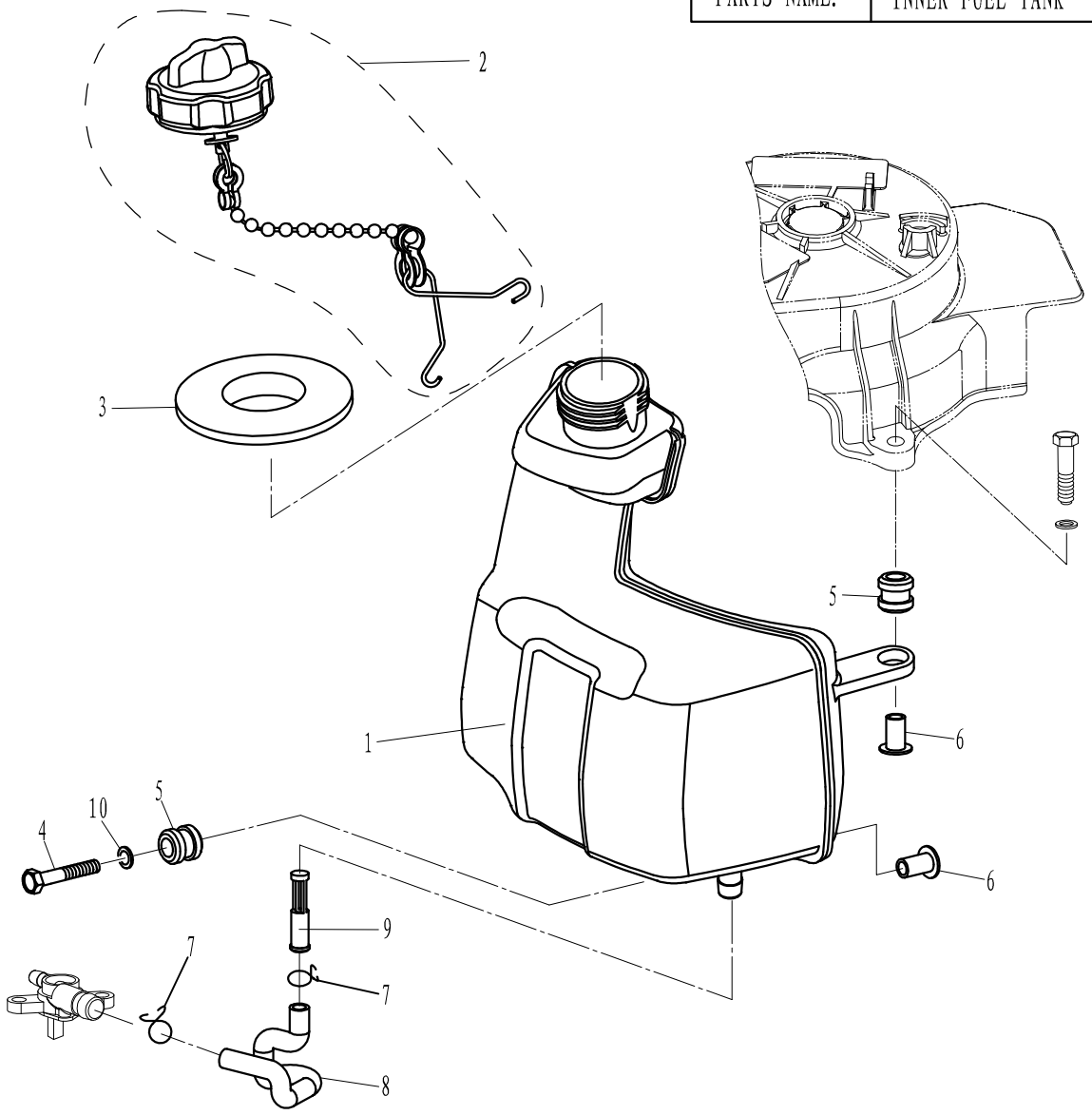

SN. 参照号码	PART NO. 零件编号	DESCRIPTION 零件名称(中文)	DESCRIPTION 零件名称(英文)	QTY 数量					REMARKS 备注
1	F4-04120001-A	油箱	TANK	1					
2	F4-04120100	油箱盖组件	TANK COVER ASSY	1					
3	T5-04000015	油箱口减震圈	ABSORBER, TANK	1					
4	GB/T5783-M6x25	六角头螺栓M6×25	BOLT M6X25	1					
5	F4-04120002	油箱减震器	DAMPER , TANK	3					
6	F4-04120003	减震器衬管	BUSH , DAMPER	3					
7	F4-05000010	油管夹簧A	CLIP , OIL PIPE "A"	2					
8	F6-05000003	燃油定型管F	PIPE , FUEL "F"	1					
9	F4-04120005	油箱滤油芯	STRAINER , TANK	1					
10	GB/T97.1-6	平垫圈6	WASHER 6	1					

零部件名称:	燃油系统
PARTS NAME:	FUEL

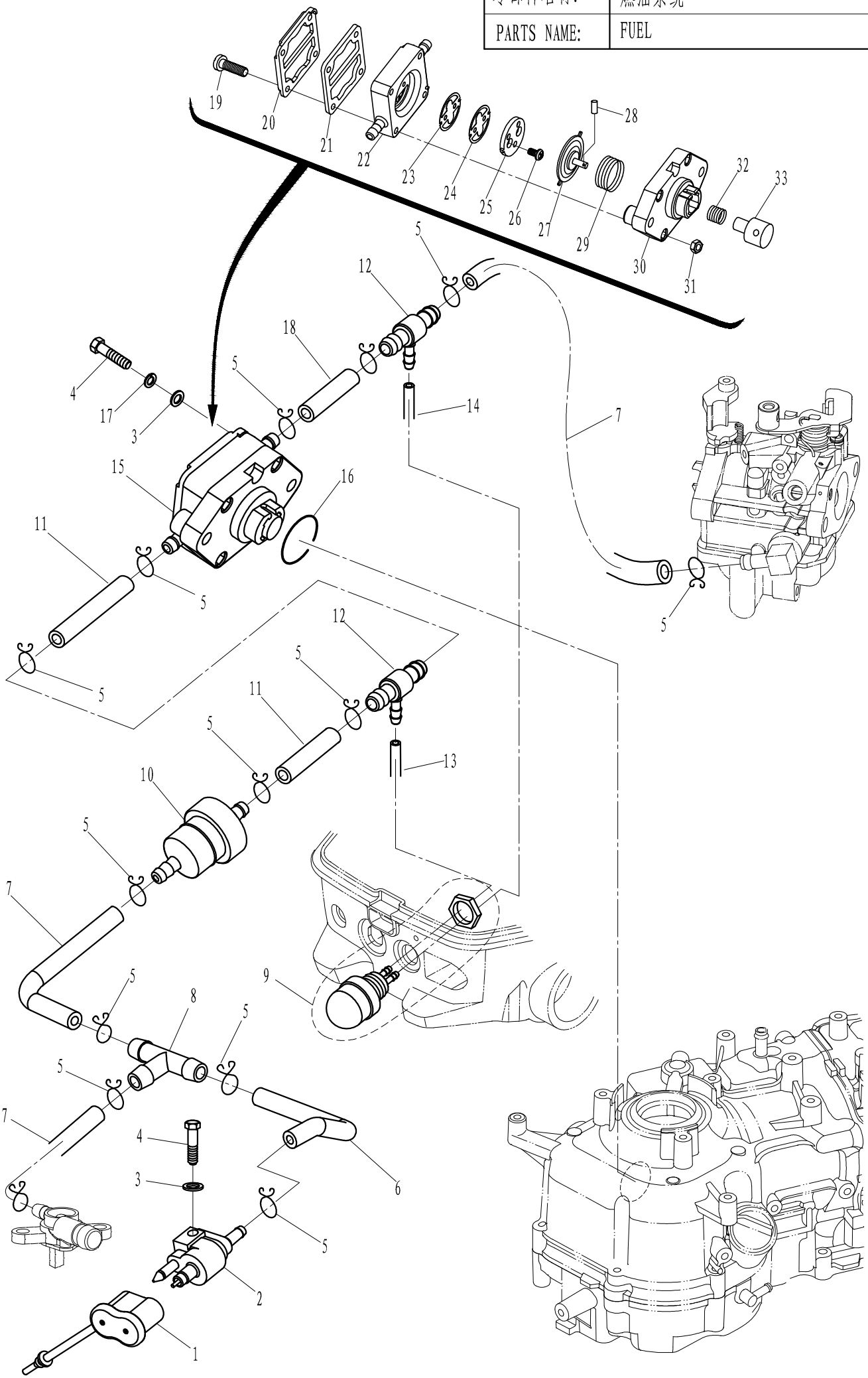

零部件名称: 燃油系统

PARTS NAME: FUEL

SN. 参照号码	PART NO. 零件编号	DESCRIPTION 零件名称(中文)	DESCRIPTION 零件名称(英文)	QTY 数量					REMARKS 备注
1	F6-05000006	燃油接头护套	RUBBER COVER	1					
2	F4-05000200	燃油管接头组件	FUEL PIPE TIE-IN ASSY	1					
3	GB/T97.1-6	平垫圈6	WASHER 6	3					
4	GB/T5783-M6X25	六角螺栓M6X25	BOLT M6X25	3					
5	F4-04000030	油管夹簧B	CLIP "B",FUEL PIPE	14					
6	F6-05000002	燃油定型管E	FUEL PIPE "E"	1					
7	F4-05000007	燃油管C	FUEL PIPE "C"	3					
8	F15-05000011	三通	PIPE,JOINT 3	1					
9	F6-05010000	手动油泵组件	MANUAL PUMP ASSY	1					
10	F4-05000300	燃油过滤器组件	FUEL FILTER ASSY	1					
11	F6-04000017	燃油管C Ø5XØ10X60	FUEL PIPE "C" Ø5XØ10X60	2					
12	F6-04000600	三通	PIPE,JOINT 3	2					
13	F6-04000018	燃油管D Ø2.5XØ7X240	FUEL PIPE "D" Ø2.5XØ7X240	1					
14	F6-04000016	燃油管B Ø2.5XØ7X500	FUEL PIPE "B" Ø2.5XØ7X500	1					
15	F4-04090000	燃油泵组件	FUEL PUMP ASSY	1					
16	F4-04090009	燃油泵座O形圈	O RING	1					
17	GB/T93-6	弹簧垫圈6	SPRING WASHER 6	2					
18	T6-03000002	燃油定型管	PIPE	1					
19	GB/T823-M4X25	十字槽小盘头螺钉M4X25	SCREW ,SMALL PAN HEAD M4X25	4					
20	F4-04090003	燃油泵盖	COVER ,FUEL PUMP	1					
21	F4-04090004	上隔膜	DIAPHRAGM ,TOP	1					
22	F4-04090100A	燃油泵壳	FUEL PUMP SHELL	1					
23	F4-04090001A	瓣膜B	VALVE "B"	1					
24	F4-04090002A	瓣膜A	VALVE "A"	1					
25	F4-04090003A	隔膜限位块	LIMITING BLOCK,SEPTUM	1					
26	GB/T819.2-M3X5	十字槽沉头螺钉 M3X5	SCREW M3X5	2					
27	F4-04090100	隔膜组件	DIAPHRAGM ASSY	1					
28	GB/T309-3X12	滚针Ø3X12	ROLLER NEEDLE Ø3X12	1					
29	F4-04090008	隔膜弹簧	SPRING ,DIAPHRAGM	1					
30	F4-04090001	燃油泵座	SEAT ,FUEL PUMP	1					
31	GB/T6170-M4	六角螺母M4	NUT M4	4					
32	F4-04090007	柱塞弹簧	SPRING ,PLUNGER	1					
33	F4-04090006	柱塞	PLUNGER	1					

零部件名称:	起动器组件
PARTS NAME:	STARTER ASSY

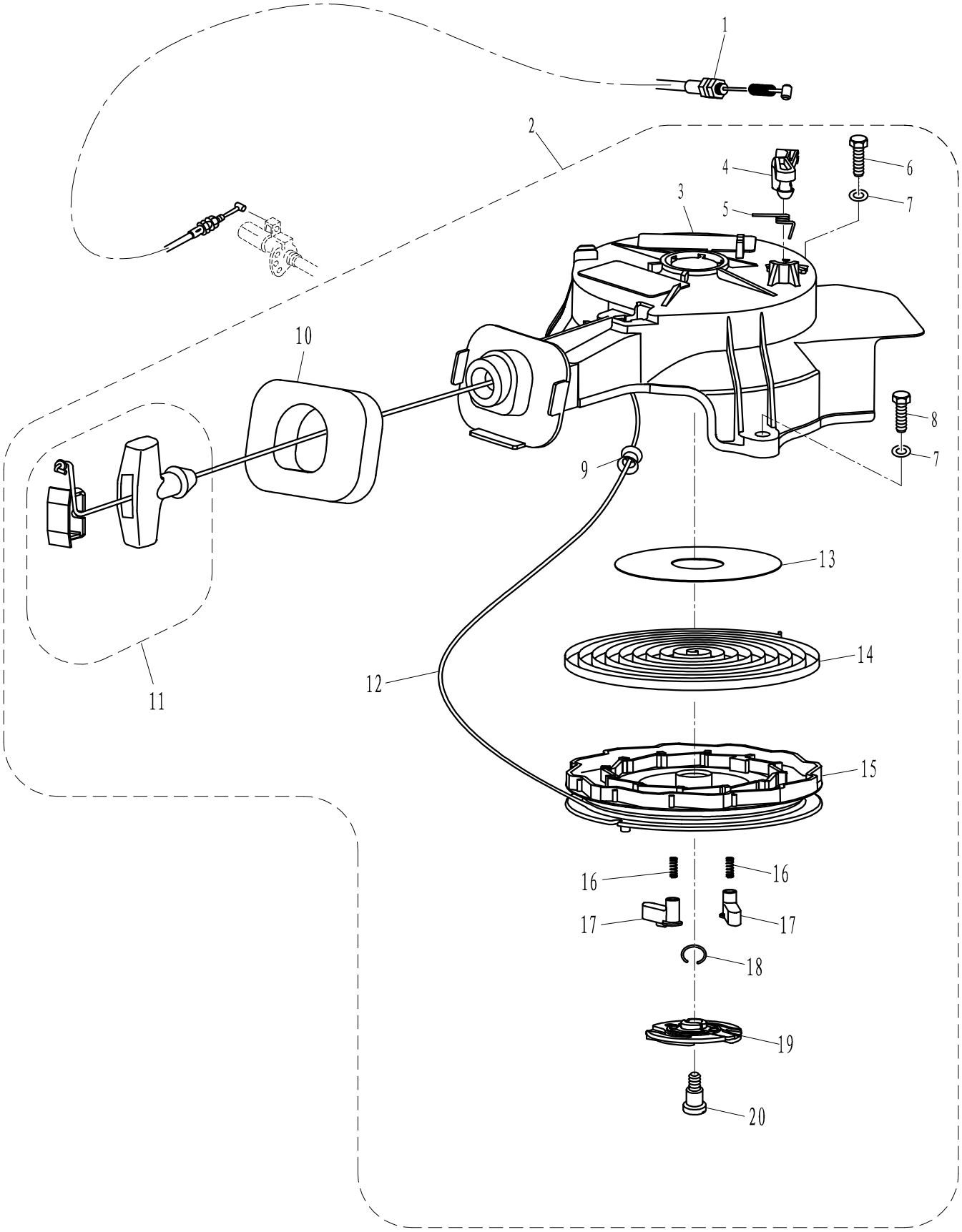

零部件名称: 起动器组件

PARTS NAME: STARTER ASSY

SN. 参照号码	PART NO. 零件编号	DESCRIPTION 零件名称(中文)	DESCRIPTION 零件名称(英文)	QTY 数量					REMARKS 备注
1	F6-05000010	制动器钢索	TIGHTWIRE, DETENT	1					
2	F6-04070000A	起动器组件	STARTER ASSY	1					
3	F6-04070001	起动器外壳	CASING, STARTER	1					
4	F4-04130009	制动器	DETENT	1					
5	F4-04130010	制动器扭簧	WREST SPRING, DETENT	1					
6	GB/T5783-M6x20	六角头螺栓M6x20	BOLT M6x20	1					
7	GB/T97.1-6	平垫圈6	WASHER 6	3					
8	GB/T5783-M6x35	六角头螺栓 M6x35	BOLT M6x35	2					
9	F4-04130013	起动绳导管	MEATUS, START ROPE	1					
10	F6-04070003	起动减震块	ABSORBER, RUBBER	1					
11	F4-04130100	起动手柄组件	STARTER HADLE ASSY	1					
12	F4-04130011	锦纶编织线φ4.5x1.80m	WIRE, STARTER	1					
13	F4-04130014	起动轮减磨片	WASHER, THRUST	1					
14	F4-04130005	涡形弹簧	SPRING, VOLUTE	1					
15	F6-04070004A	起动轮	WHELL, START-UP	1					
16	F8-05050007	卡瓣弹簧	SPRING, DRIVE	2					
17	F8-05050006	卡瓣	PAWL, DRIVE	2					
18	F8-05050009	起动压板夹簧	SPRING, PLATE	1					
19	F8-05050008	起动压板	PLATE, PRELL	1					
20	F6-04070006A	起动压板螺钉	BOLT, STARTER	1					

零部件名称:	顶罩组件
PARTS NAME:	TOP COWLING ASSY

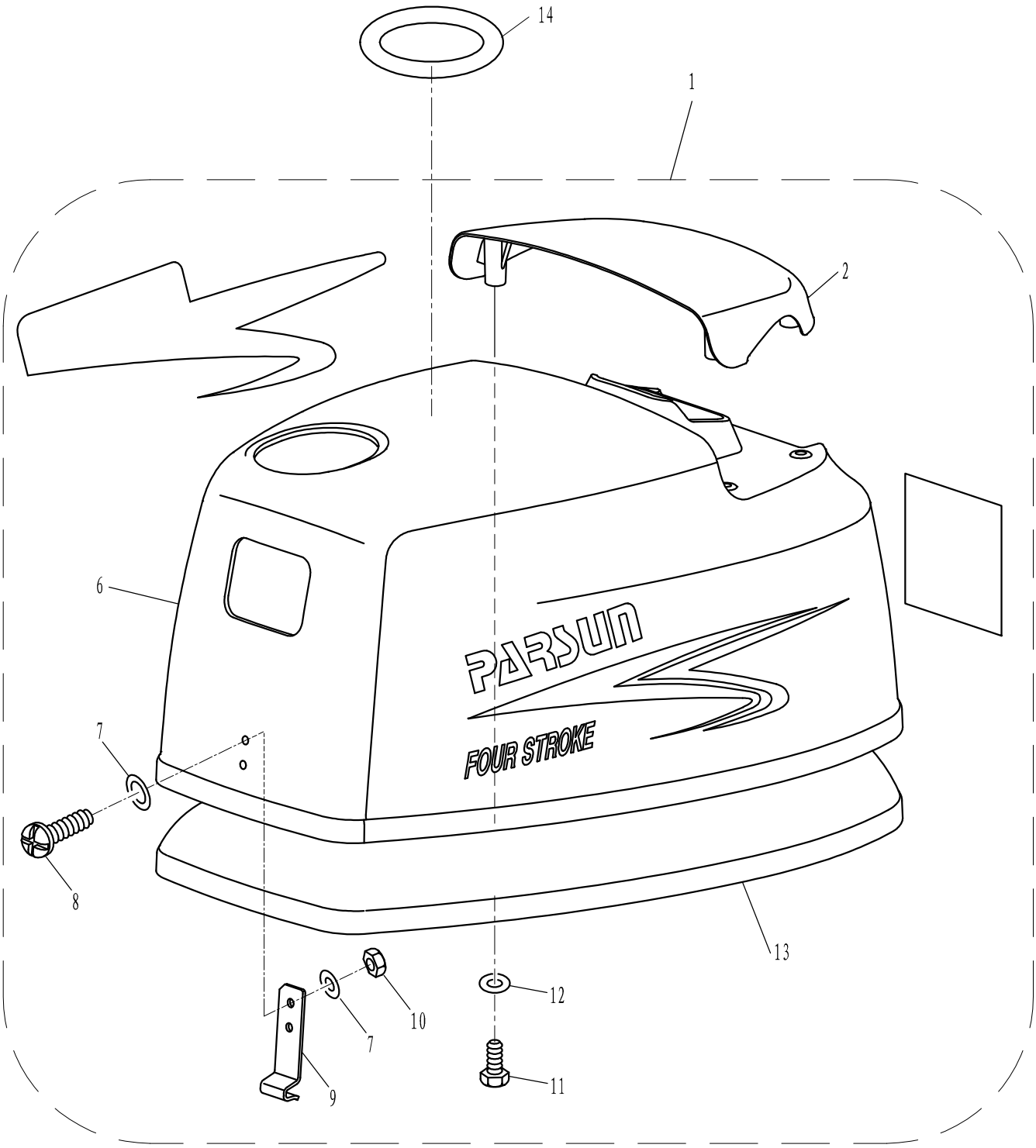

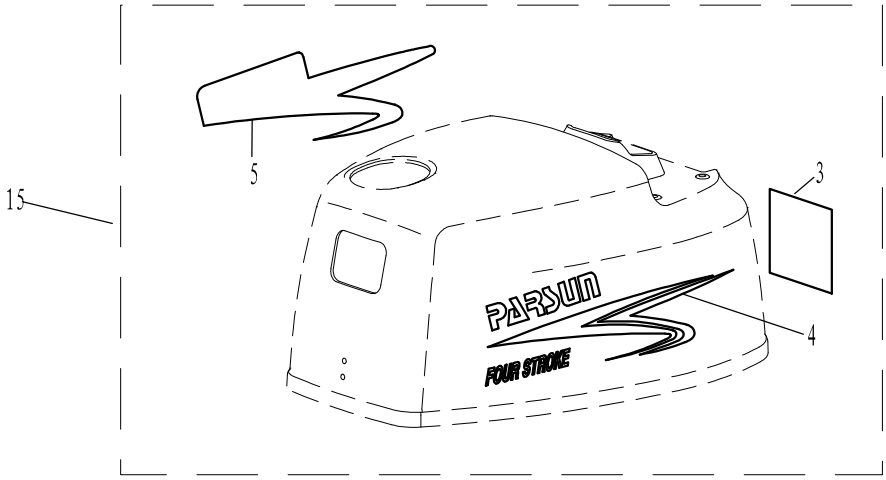

零部件名称: 顶罩组件

PARTS NAME: TOP COWLING ASSY

SN. 参照号码	PART NO. 零件编号	DESCRIPTION 零件名称(中文)	DESCRIPTION 零件名称(英文)	QTY 数量					REMARKS 备注
1	F6-06000000	顶罩组件	TOP COWLING ASSY	1					
2	F6-06000004	顶罩盖	COVER,TOP COWLING	1					
3	F8-08000006	标贴 6	MARK 6	1					F6A
	F4-08000005	标贴 5	MARK 5	1					F5A
4	F15-12000001	顶罩左标贴	LEFT MARK,TOP COWLING	1					
5	F15-12000002	顶罩右标贴	RIGHT MARK,TOP COWLING	1					
6	F6-06000001	顶罩	TOP COWLING	1					
7	GB/T97.1-5	平垫圈 5	WASHER 5	4					
8	GB/T818-M5x14	十字槽盘头螺钉 M5x14	SCREW,PAN HEAD M5x14	2					
9	T36-06000003	前挂钩	FRONT POTHOOK	1					
10	GB/T6170-M5	六角螺母 M5	NUT M5	2					
11	GB/T5783-M6x20	六角螺栓 M6x20	BOLT M6x20	4					
12	GB/T97.1-6	平垫圈6	WASHER 6	4					
13	F6-06000002	密封橡胶条	SEAL	1					
14	F4-08000019	标贴19	MARK 19	1					
15	F6-08000000-6	全套标贴6	STICKER FOR 6HP	1					F6A
	F6-08000000-5	全套标贴5	STICKER FOR 5HP	1					F5A

零部件名称:	化油器总成
PARTS NAME:	CARBURETOR ASSY

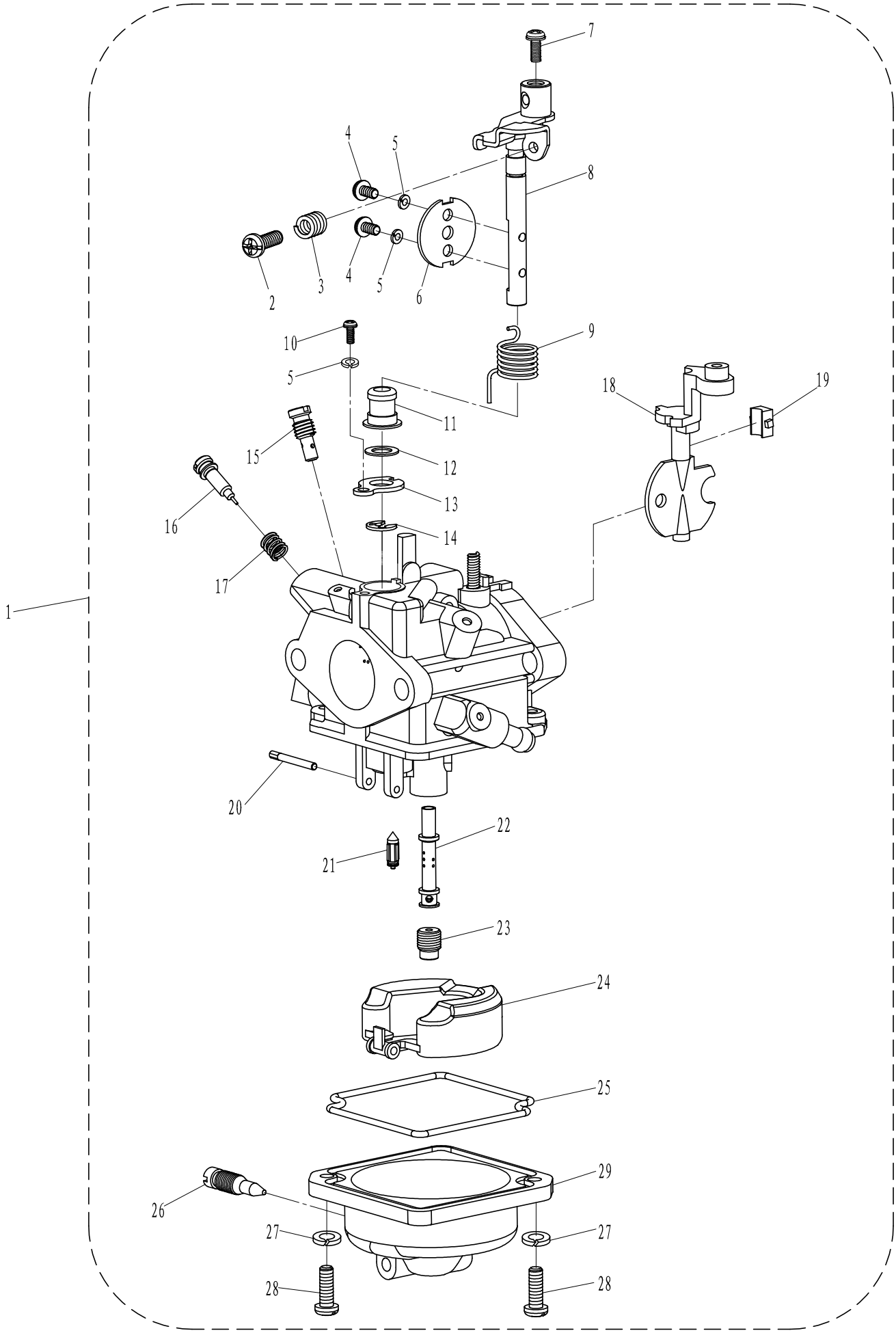

零部件名称: 化油器总成

PARTS NAME: CARBURETOR ASSY

SN. 参照号码	PART NO. 零件编号	DESCRIPTION 零件名称(中文)	DESCRIPTION 零件名称(英文)	QTY 数量					REMARKS 备注
1	F6-04060000	化油器总成	CARBURETOR ASSY	1					
2	F6-04060006	怠速螺钉	SCREW, AIR ADJUSTING	1					
3	F6-04060007	怠速螺钉弹簧	SPRING	1					
4	GB/T818-M3X6	十字槽盘头螺钉M3X6	SCREW M3X6	2					
5	GB/T93-3	弹簧垫圈3	SPRING WASHER 3	3					
6	F6-04060008	油门挡板	APRON, ACCELRATOR	1					
7	GB/T818-M4X8	十字槽盘头螺钉M4X8	SCREW M4X8	1					
8	F6-04060100	油门摆杆组件	ACCELERATOR BAR ASSY	1					
9	F6-04060002	摆杆扭簧	SPRING, SWING LINK	1					
10	GB/T818-M3X8	十字槽盘头螺钉M3X8	SCREW M3X8	1					
11	F6-04060003	摆杆衬套	BUSHING	1					
12	F6-04060004	尼龙垫圈	WASHER, NYLON	1					
13	F6-04060005	摆杆压板	PRESSING PLATE	1					
14	GB/T896-4	开口挡圈4	CIRCLIP 4	1					
15	F6-04060013	空气减速量孔	JET, AIR ADJUSTING	1					
16	F6-04060011	混合比调整螺钉	SCREW, MIXTURE	1					
17	F6-04060012	混合比调整螺钉弹簧	SPRING	1					
18	F6-04060009	阻风门摆杆	APRON, AIR CHOKE	1					
19	F6-04060010	阻风门限位块	BLOCK, AIR CHOKE	1					
20	F6-04060016	浮子销	PIN, FLOAT	1					
21	F6-04060014	针阀	NEEDLE VALVE	1					
22	F6-04060017	主喷管	MAIN NOZZLE	1					
23	F6-04060018	主量孔	MAIN JET	1					
24	F6-04060015	浮子	FLOAT	1					
25	F6-04060020	油杯密封圈	SEAL RING	1					
26	F6-04060021	放油螺钉	SCREW, DRAIN	1					
27	GB/T93-4	弹簧垫圈4	SPRING WASHER 4	2					
28	GB/T818-M4X12	十字槽盘头螺钉M4X12	SCREW M4X12	2					
29	F6-04060019	油杯本体	BODY, OIL CUP	1					

零部件名称:	外燃油箱(12L/9L)
PARTS NAME:	OUTER FUEL TANK(12L/9L)

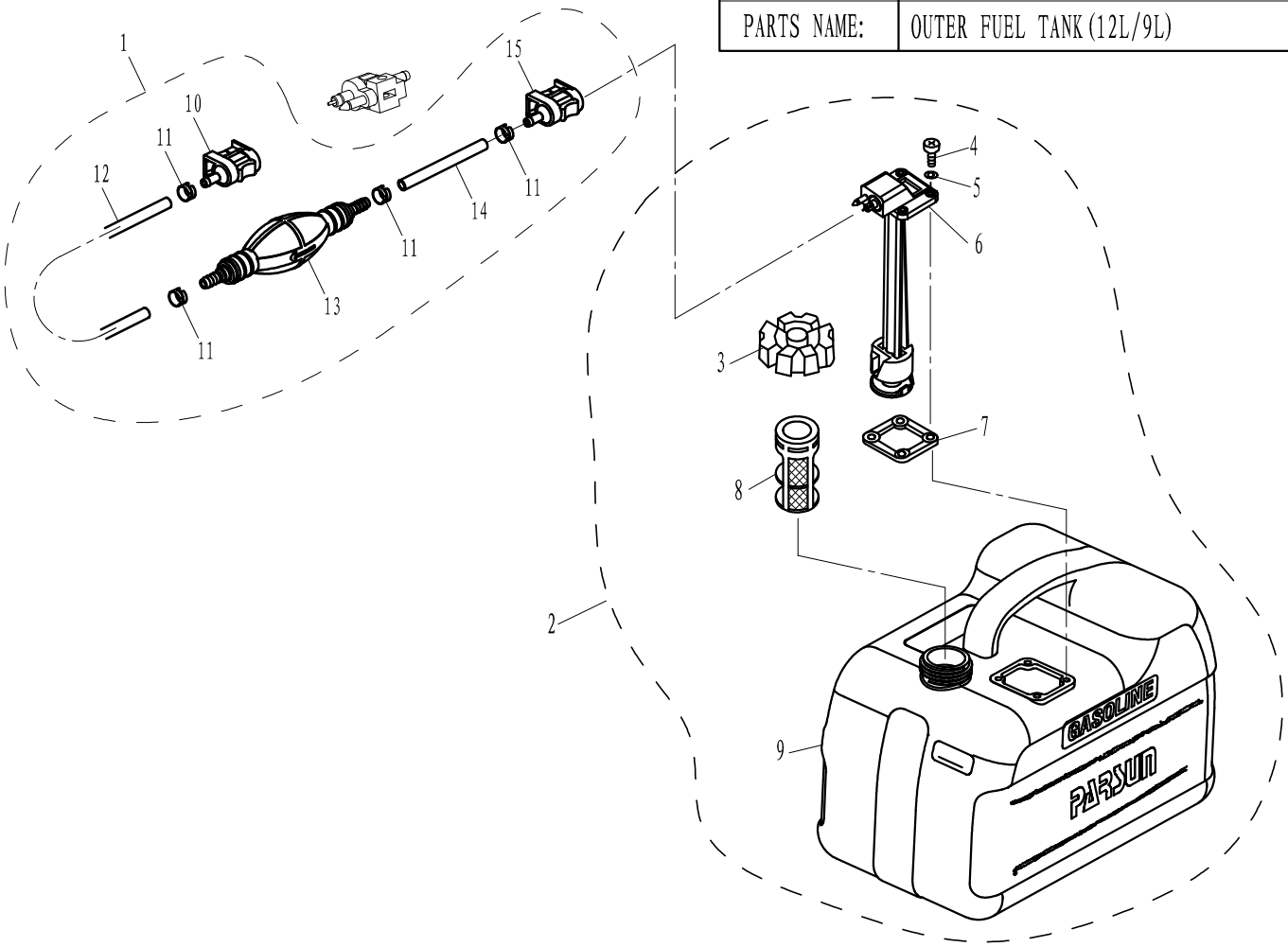

SN. 参照号码	PART NO. 零件编号	DESCRIPTION 零件名称(中文)	DESCRIPTION 零件名称(英文)	QTY 数量					REMARKS 备注
1	F15-09000000	油管总成	OIL TUBE ASSY	1					
2	F8-10000000	油箱组件	FUEL TANK ASSY	1					
3	F15-10010000	油箱盖组件	COVER ASSY, FUEL TANK	1					
4	GB/T818-M5x18	十字槽盘头螺钉M5x18	SCREW , PAN HEAD M5x18	4					
5	GB/T97.1-5	平垫圈5	WASHER 5	4					
6	F15-10020000	油量计总成	OLEOMETER ASSY	1					
7	F15-10000003	衬垫	GASKET	1					
8	F15-10000002	油箱滤网	STRAINER	1					
9	F8-10000001	油箱本体	FUEL TANK	1					(12L)
	F6-07010001	油箱本体	FUEL TANK	1					(9L)
10	F15-09020000	燃油接头组件（出）	FUEL LINE CONNECTOR(ENGINE SIDE, FEMALE)	1					
11	F15-09000003	卡箍 B	CLAMP B	4					
12	F15-09000001	油管A(Φ10xΦ6xΦ2080)	FUEL LINE A(Φ10xΦ6x2080)	1					
13	F15-09030000	手动油泵组件	PRIMER BULB ASSY	1					
14	F15-09000002	油管B(Φ10xΦ6x850)	FUEL LINE B(Φ10xΦ6x850)	1					
15	F15-09010000	燃油接头组件（进）	FUEL LINE CONNECTOR(FUEL TANK SIDE, FEMALE)	1					

零部件名称:	气缸头总成(维修件)
PARTS NAME:	CYLINDER HEAD ASSY (REPARE KIT)

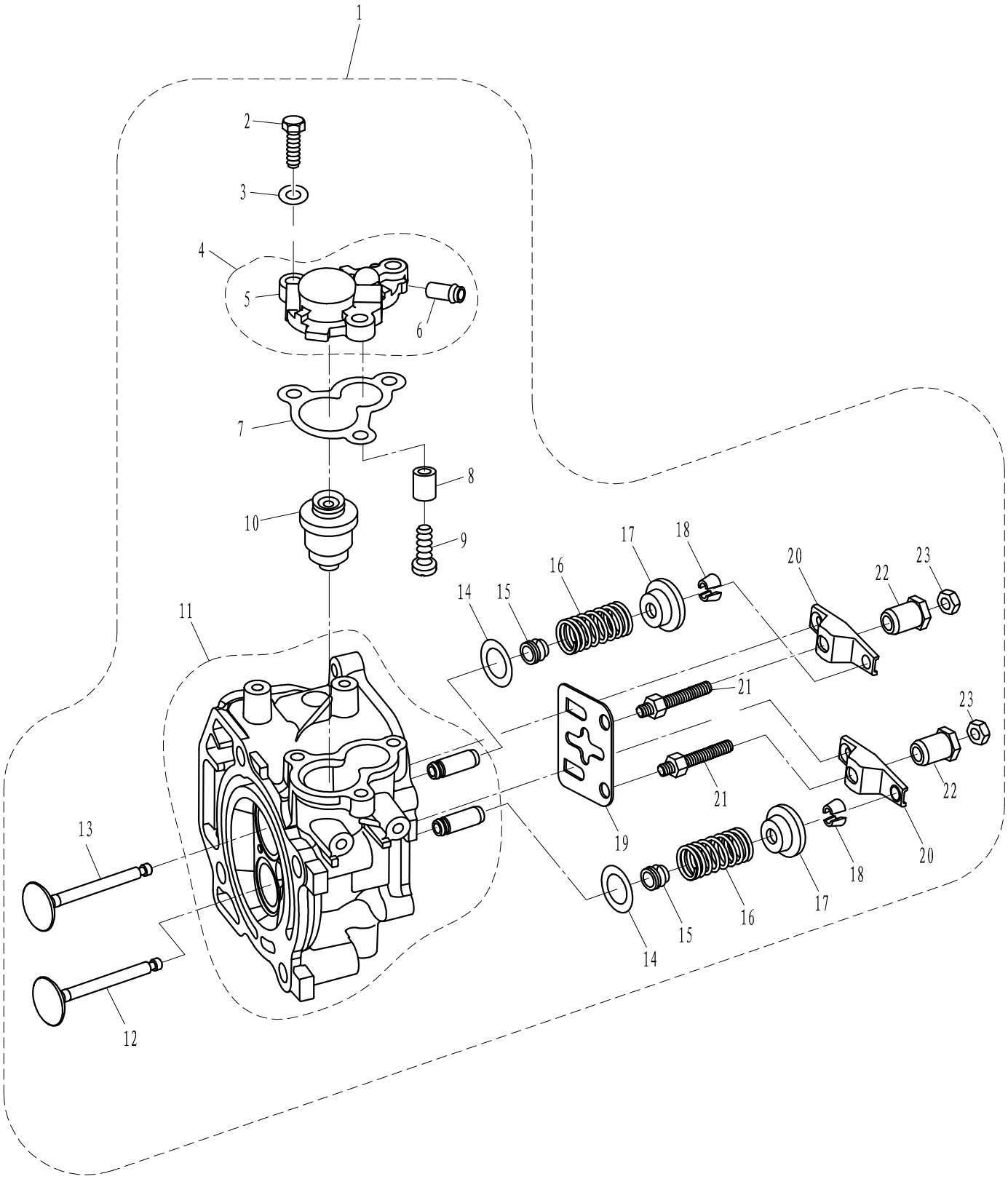

零部件名称: 气缸头总成(维修件)

PARTS NAME: CYLINDER HEAD ASSY (REPARE KIT)

SN. 参照号码	PART NO. 零件编号	DESCRIPTION 零件名称(中文)	DESCRIPTION 零件名称(英文)	QTY 数量					REMARKS 备注
1	F6-04050000	气缸头总成	CYLINDER HEAD ASSY	1					
2	GB/T5783-M6x20	六角螺栓 M6x20	BOLT M6x20	3					
3	GB/T97.1-6	平垫圈6	WASHER 6	3					
4	F4-04070000	节温器盖组件	THERMOSTAT COVER ASSY	1					
5	F4-04070001	节温器盖	COVER, THERMOSTAT	1					
6	F4-04010102	气嘴	GAS NOZZLE	1					
7	F4-04000011	节温器盖密封垫	GASKET, THEMOSTAT COVER	1					
8	F4-04070003	节温器盖阳极	ANODE, THEMOSTAT COVER	1					
9	GB/T818-M5x25	十字槽盘头螺钉 M5x25	SCREW M5x25	1					
10	F15-07000031	节温器(S60)	THEMOSTAT (S60)	1					
11	F6-04050100	气缸头组件	CYLINDER HEAD SUBASSEMBLY	1					
12	F6-04050002	排气门	EXHAUST VALVE	1					
13	F6-04050001	进气门	INTAKE VALVE	1					
14	F4-04080007	气门弹簧垫圈	WASHER, VALVE SPRING	2					
15	166F-010003	气门油封	OIL SEAL, VALVE	2					
16	F6-04050003	气门弹簧	SPRING, VALVE	2					
17	F8-05030006	气门弹簧座圈	SEAT, VALVE SPRING	2					
18	F8-05030007	气门锁夹	CLAMP, VALVE	4					
19	F6-04050004	导向板	PLATE, PUSH ROD	1					
20	166F-010009	摇臂	ROCKER ARM, VALVE	2					
21	166F-010008	摇臂螺杆	BOLT, ROCKER ARM	2					ONE SET
22	166F-010010	摇臂球座	PIVOT, ROCKER ARM	2					
23	166F-010011	锁紧螺母M6x0.75	LOCKNUT M6x0.75	2					

零部件名称:	发动机头组件（修理件）
PARTS NAME:	ENGINE ASSY (REPARE KIT)

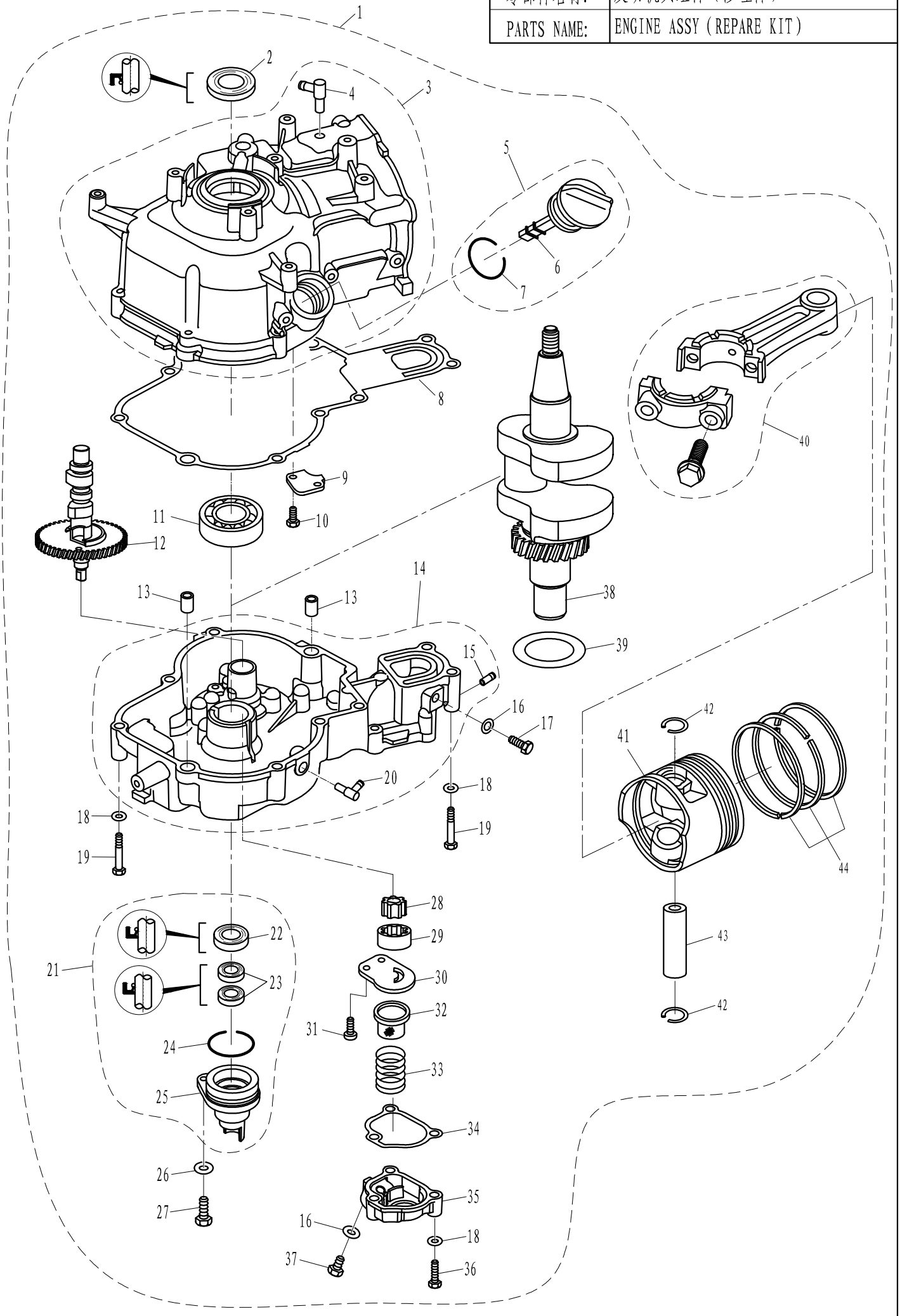

零部件名称: 发动机头组件（修理件）

PARTS NAME: ENGINE ASSY (REPARE KIT)

SN. 参照号码	PART NO. 零件编号	DESCRIPTION 零件名称(中文)	DESCRIPTION 零件名称(英文)	QTY 数量					REMARKS 备注
1	F6-04000000	发动机头组件	ENGINE ASSY	1					
2	F4-04010004	曲轴油封A 25x40x5	OIL SEAL	1					
3	F6-04010100	曲轴箱体组件	CRANK CASE ASSY	1					
4	F8-05000700	气嘴组件	GAS NIPPLE ASSY	1					
5	F4-04000036	带尺机油盖组件	PLUG WITH DIPSTICK ASSY	1					
6	F4-04000007	带尺机油盖	PLUG WITH DIPSTICK	1					
7	F4-04000008	机油盖阻油圈	O-RING	1					
8	F6-04000001	曲轴箱体复合垫	COMPLEX GASKET, CRANKCASE	1					
9	F6-04010004	挡油板	OIL BAFFLE PLATE	1					
10	GB/T5783-M5x10	六角螺栓 M5x10	BOLT M5x10	2					
11	6205C3	深沟球轴承6205C3	BEARING 6205C3	1					
12	F6-04030000	凸轮减压组件	CAMSHAFT ASSY	1					
13	F4-04000003	空心定位销 φ10x8.4x14	HOLLOW PIN φ10x8.4x14	2					
14	F6-04040100	曲轴箱盖组件	COVER, CRANK CASE	1					
15	F4-04010102	气嘴	GAS NIPPLE	1					
16	F4-04000006	放油螺栓密封垫	WASHER	2					
17	GB/T5783-M8x14	六角螺栓 M8x14	BOLT M8x14	1					
18	GB/T97.1-6	平垫圈 6	WASHER 6	13					
19	T6-05000021	发动机螺栓 M6x50	BOLT M6x50	10					
20	F15-04000005	水嘴	WATER NIPPLE	1					
21	F6-04080000	油封壳体组件	OIL SEAL SHELL ASSY	1					
22	F2.6-04010001	曲轴油封(B) 20x30x7	OIL SEAL 20x30x7	1					
23	F6-04080001	驱动轴上油封 10.1x21x7	OIL SEAL 10.1x21x7	2					
24	F4-04060002	O形圈Φ32.5xΦ1.8	O RING Φ32.5xΦ1.8	1					
25	F4-04060001	油封壳体	SHELL, OIL SEAL	1					
26	GB/T97.1-8	平垫圈 8	WASHER 8	1					
27	GB/T5783-M8x20	六角螺栓 M8x20	BOLT M8x20	1					
28	F6-04040002	机油泵内转子	INNER ROTOR, OIL PUMP	1					
29	F6-04040003	机油泵外转子	OUTER ROTOR, OIL PUMP	1					
30	F6-04040004	油泵盖板	COVER BOARD, OIL PUMP	1					
31	GB/T818-M6x10	十字槽盘头螺栓 M6x10	BOLT M6x10	2					
32	F6-04040006	油泵滤网	STRAINER, OIL PUMP	1					
33	F6-04040007	油泵弹簧	SPRING, OIL PUMP	1					
34	F6-04040005	油泵密封垫	GASKET, OIL PUMP	1					
35	F6-04040008	油泵盖	COVER, OIL PUMP	1					
36	GB/T5783-M6x35	六角螺栓 M6x35	BOLT M6x35	3					
37	F6-04040009	放油螺栓	BOLT	1					
38	F6-04000100	曲轴组件	CRANK ASSY	1					
39	F4-04000004	箱盖减磨圈	WASHER	1					
40	F6-04020100	连杆组件	ROD, CONNECTING	1					
41	F6-04020001	活塞	PISTON	1					
42	F6-04020004	活塞销卡簧	CIRCLIP	2					
43	F6-04020003	活塞销	PIN, PISTON	1					

零部件名称: 发动机头组件（修理件）

PARTS NAME: ENGINE ASSY (REPARE KIT)

SN. 参照号码	PART NO. 零件编号	DESCRIPTION 零件名称(中文)	DESCRIPTION 零件名称(英文)	QTY 数量					REMARKS 备注
44	F6-04020002	活塞环组件	PISTON RING ASSY	1					

零部件名称:	附件 I (修理件)
PARTS NAME:	APPENDIX I (REPAIR KIT)

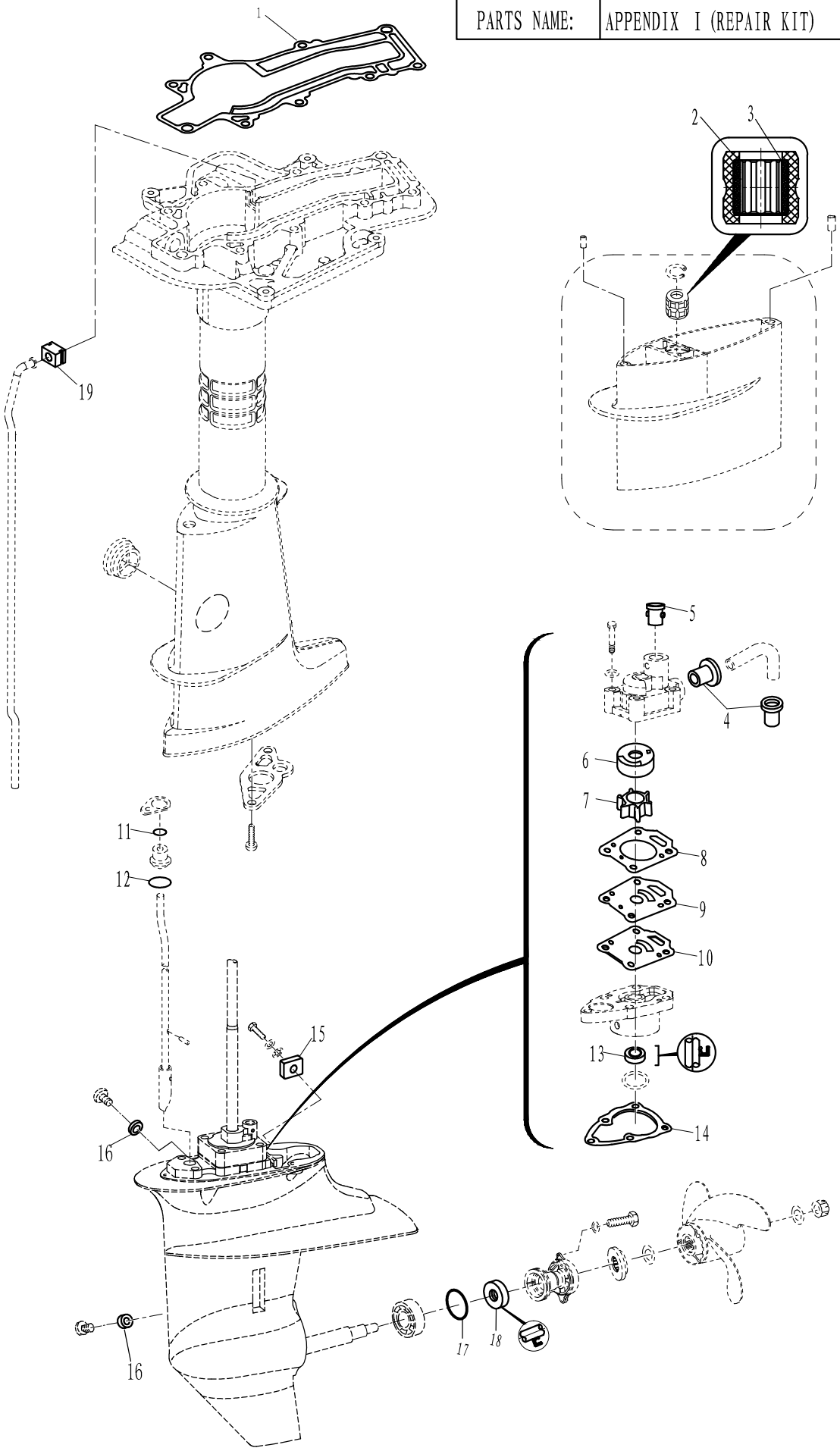

零部件名称: 附件Ⅰ(修理件)

PARTS NAME: APPENDIX Ⅰ (REPAIR KIT)

SN. 参照号码	PART NO. 零件编号	DESCRIPTION 零件名称(中文)	DESCRIPTION 零件名称(英文)	QTY 数量					REMARKS 备注
1	F6-00000001	发动机密封垫	GASKET, ENGINE	1					
2	F2.6-03020003L	驱动轴衬套橡胶套	RUBBER BUSHING	1					
3	T5-02010002	驱动轴衬套	BUSHING, DRIVE SHAFT	1					
4	T5-03000013	水管导向套A	SEAL A, WATER PIPE	2					
5	T5-03000014	水管导向套B	SEAL B, WATER PIPE	1					
6	F6-03000002	水泵内壳	INNER SHELL, WATER PUMP	1					
7	T5-03000300	水泵叶轮	IMPELLER, WATER PUMP	1					
8	F6-03000003	外挡板上密封垫	GASKET, OUTER PLATE	1					
9	T5-03000007	外挡板	OUTER PLATE	1					
10	T5-03000006	外挡板下密封垫	GASKET, OUTER PLATE	1					
11	T5-03000022	导向套密封圈B	SEAL B, ORIENTED BUSHING	1					
12	JISB2401 P16	导向套密封圈A	SEAL A, ORIENTED BUSHING	1					
13	T5-03000202	水泵座油封	OIL SEAL, WATER PUMP SEAT	1					
14	T5-03000005	水泵座密封垫	GASKET, WATER PUMP SEAT	1					
15	T5-03000017	水下阳极	ANODE	1					
16	F4-03000024	注油孔螺栓密封垫	GASKET	2					
17	JASOF404 31-050	O形圈 50x3.1	O-RING	1					
18	F8-04040004	螺旋桨轴油封15x28x10	OIL SEAL	1					
19	F4-02040002	工形橡胶圈	RUBBER SEAL	1					

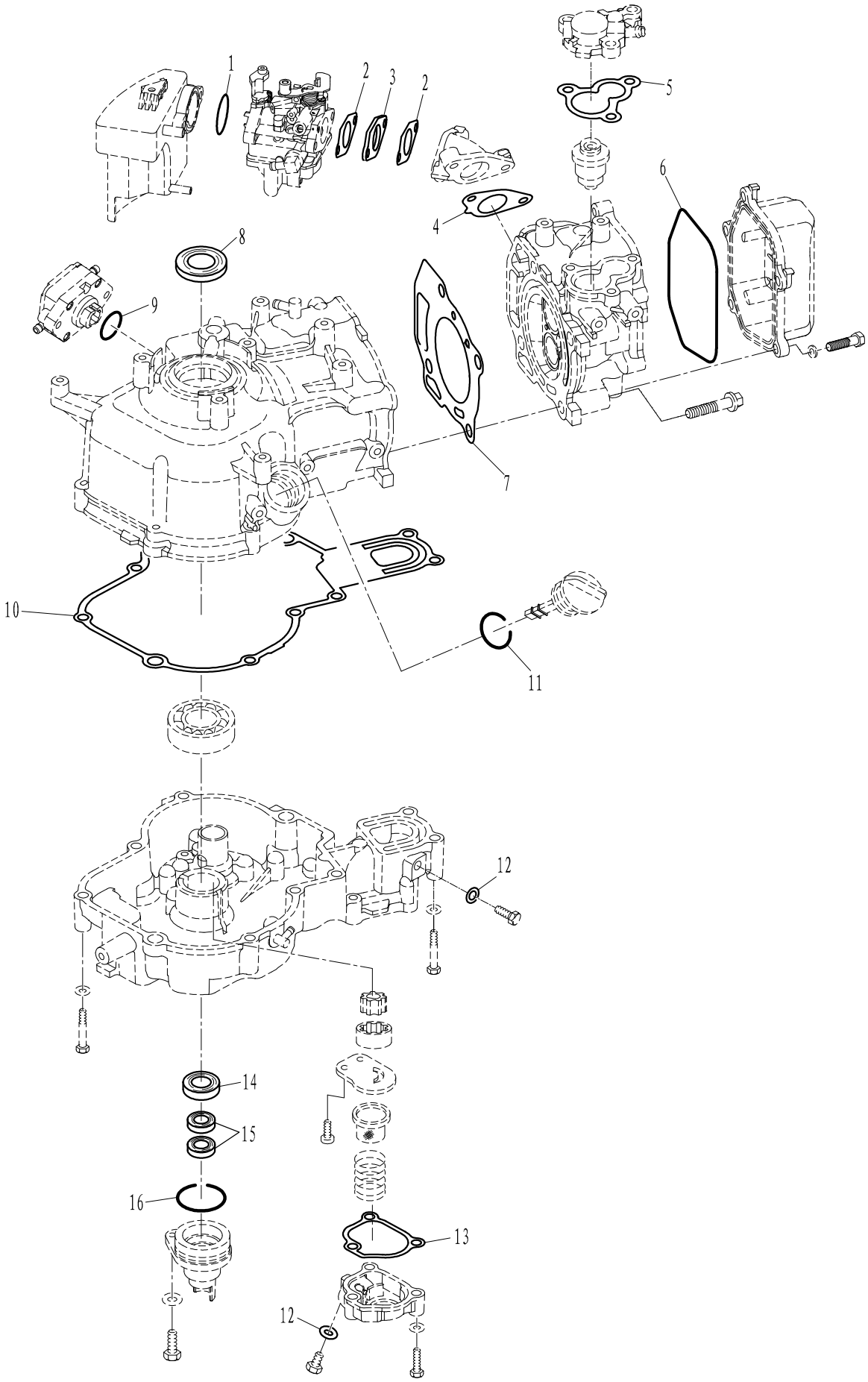
1
2
3
2
5
6
4
8
9
7
10
11
12
14
15
16
13
12

零部件名称: 附件Ⅱ(修理件)

PARTS NAME: APPENDIX Ⅱ(REPAIR KIT)

SN. 参照号码	PART NO. 零件编号	DESCRIPTION 零件名称(中文)	DESCRIPTION 零件名称(英文)	QTY 数量					REMARKS 备注
1	GB/T3452-31.5x1.8	进气消音器O形圈	O-RING	1					
2	F6-04000012	化油器密封垫	GASKET, CARBURETOR	2					
3	F6-04000013	化油器垫块	GASKET, CARBURETOR	1					
4	F6-04000010	进气歧管密封垫	GASKET, INTAKE MANIFOLD	1					
5	F4-04000011	节温器盖密封垫	GASKET, THEMOSTAT COVER	1					
6	F6-04000005	缸头罩密封圈	SEAL RING	1					
7	F6-04000002	缸头复合垫	GASKET, CYLINDER HEAD	1					
8	F4-04010004	曲轴油封A 25x40x5	OIL SEAL	1					
9	F4-04090009	燃油泵座O形圈	O-RING	1					
10	F6-04000001	曲轴箱体复合垫	COMPLEX GASKET, CRANKCASE	1					
11	F4-04000008	机油盖阻油圈	O-RING	1					
12	F4-04000006	放油螺栓密封垫	WASHER	2					
13	F6-04040005	油泵密封垫	GASKET, OIL PUMP	1					
14	F2.6-04010001	曲轴油封(B) 20x30x7	OIL SEAL 20x30x7	1					
15	F6-04080001	驱动轴上油封 10.1x21x7	OIL SEAL 10.8x21x7	2					
16	F4-04060002	滤杯密封圈Φ32.5xΦ1.8	SEAL Φ32.5xΦ1.8	1					

零部件名称: 零件检索表

PARTS NAME: PARTS CATALOGUE INDEX

零件代号 PART NO.	页码/序号 PAGE/NO.	零件代号 PART NO.	页码/序号 PAGE/NO.	零件代号 PART NO.	页码/序号 PAGE/NO.
166F-000001	21-2	F4-01090200	4-13	F4-04120005	22-9
166F-010003	21-12	F4-01090300	4-1	F4-04120100	22-2
166F-010008	21-6	F4-01090401	7-1	F4-04130005	26-14
166F-010009	21-5	F4-02000002A	6-13	F4-04130009	26-4
166F-010010	21-7	F4-02000003	9-7	F4-04130010	26-5
166F-010011	21-8	F4-02000006	9-11	F4-04130011	26-12
F15-00000006	7-8	F4-02000011	6-10	F4-04130013	26-9
F15-04000005	20-18	F4-02000012	6-11	F4-04130014	26-13
F15-05000011	24-8	F4-02010000-B	9-4	F4-04130100	26-11
F15-06000016	12-61	F4-02040002	6-8	F4-05000007	24-7
F15-07000016	4-28	F4-03000023	11-36	F4-05000010	22-7
F15-07000031	17-9	F4-03000024	11-37	F4-05000013-2	7-18
F15-07060001	13-13	F4-04000003	17-17	F4-05000020	7-16
F15-09000000	31-1	F4-04000003	20-11	F4-05000023	7-13
F15-09000001	31-12	F4-04000004	18-2	F4-05000101	7-6
F15-09000002	31-14	F4-04000006	20-14	F4-05000102	7-4
F15-09000003	31-11	F4-04000007	20-5	F4-05000200	24-2
F15-09010000	31-15	F4-04000008	20-6	F4-05000300	24-10
F15-09020000	31-10	F4-04000011	17-6	F4-08000005	28-3
F15-09030000	31-13	F4-04000019	13-5	F4-08000019	28-14
F15-10000002	31-8	F4-04000030	15-17	F5-03030000	12-59
F15-10000003	31-7	F4-04000030	24-5	F6-00000001	6-1
F15-10010000	31-3	F4-04000034	17-15	F6-01000001	4-15
F15-10020000	31-6	F4-04000036	20-4	F6-01000002	4-14
F15-12000001	28-4	F4-04010004	20-1	F6-01000003	4-16
F15-12000002	28-5	F4-04010102	17-5	F6-01010001	2-10
F2.6-00000001	9-15	F4-04010102	20-13	F6-01010101	2-2
F2.6-00000002	9-16	F4-04060001	20-23	F6-01020001	4-11
F2.6-01050002	2-6	F4-04060002	20-22	F6-01020100	4-5
F2.6-01050100	2-5	F4-04070000	17-3	F6-01020200	4-19
F2.6-03020003L	6-21	F4-04070001	17-4	F6-02000001L	6-9
F2.6-04010001	20-20	F4-04070003	17-7	F6-02000001S	6-9
F25-01010303	7-21	F4-04080007	21-13	F6-02000002	9-12
F25-04000007	11-16	F4-04090000	24-15	F6-02000003	6-2
F25-05000016	4-18	F4-04090001	24-30	F6-02000004	6-3
F4-00000001	6-6	F4-04090001A	24-23	F6-02000005	9-2
F4-00000005	9-14	F4-04090002A	24-24	F6-02000005-1	9-1
F4-01000002	2-34	F4-04090003	24-20	F6-02000100	6-14
F4-01000003	2-12	F4-04090003A	24-25	F6-03000000L	11-1
F4-01010000	2-13	F4-04090004	24-21	F6-03000000S	11-1
F4-01010002	2-30	F4-04090006	24-33	F6-03000001	11-10
F4-01010003	2-31	F4-04090007	24-32	F6-03000002	11-11
F4-01010004	2-28	F4-04090008	24-29	F6-03000003	11-13
F4-01010005	2-29	F4-04090009	24-16	F6-03000100(L)	11-2
F4-01020000	2-27	F4-04090100	24-27	F6-03000100(S)	11-2
F4-01030103	2-24	F4-04090100A	24-22	F6-03000200(L)	11-18
F4-01050002	2-36	F4-04110003	15-2	F6-03000200(S)	11-18
F4-01090003	4-4	F4-04120001-A	22-1	F6-03010000	12-59
F4-01090006	4-10	F4-04120002	22-5	F6-04000001	20-7
F4-01090007	4-9	F4-04120003	22-6	F6-04000002	17-18

零部件名称: 零件检索表

PARTS NAME: PARTS CATALOGUE INDEX

零件代号 PART NO.	页码/序号 PAGE/NO.	零件代号 PART NO.	页码/序号 PAGE/NO.	零件代号 PART NO.	页码/序号 PAGE/NO.
F6-04000003	21-3	F6-04050003	21-11	F8-01010105	2-25
F6-04000004	17-13	F6-04050004	21-4	F8-01010200	2-35
F6-04000005	17-14	F6-04050100	17-16	F8-04000002-1	12-42
F6-04000009	17-10	F6-04060000	30-1	F8-04000002-2	12-42
F6-04000010	15-13	F6-04060002	30-9	F8-04040004	12-55
F6-04000011	15-12	F6-04060003	30-11	F8-05000024	13-1
F6-04000012	15-10	F6-04060004	30-12	F8-05000700	20-3
F6-04000013	15-11	F6-04060005	30-13	F8-05030006	21-10
F6-04000014	15-5	F6-04060006	30-2	F8-05030007	21-9
F6-04000016	24-14	F6-04060007	30-3	F8-05050006	26-17
F6-04000017	24-11	F6-04060008	30-6	F8-05050007	26-16
F6-04000018	24-13	F6-04060009	30-18	F8-05050008	26-19
F6-04000019	15-16	F6-04060010	30-19	F8-05050009	26-18
F6-04000020	17-11	F6-04060011	30-16	F8-08000006	28-3
F6-04000021	17-19	F6-04060012	30-17	F8-10000000	31-2
F6-04000022	4-20	F6-04060013	30-15	F8-10000001	31-9
F6-04000023	4-22	F6-04060014	30-21	JASOF404 31-050	12-54
F6-04000024	4-21	F6-04060015	30-24	JB/T9740.1-M6	2-8
F6-04000025	4-23	F6-04060016	30-20	JISB2401 P16	11-20
F6-04000027	4-29	F6-04060017	30-22	JISB2401-P9	9-5
F6-04000028	4-30	F6-04060018	30-23	NGK CR6HSA	13-9
F6-04000029A	13-3	F6-04060019	30-29	NTN 6205C3	20-10
F6-04000100	18-1	F6-04060020	30-25	T15-01020002	4-6
F6-04000200	15-3	F6-04060021	30-26	T15-04000011	13-2
F6-04000301	15-15	F6-04060100	30-8	T36-04000023	17-12
F6-04000302	15-14	F6-04070000A	26-2	T36-06000003	28-9
F6-04000400	13-8	F6-04070001	26-3	T40-01020101	7-2
F6-04000500	13-4	F6-04070003	26-10	T5-00000001	6-15
F6-04000600	24-12	F6-04070004A	26-15	T5-00000001	11-30
F6-04000700A	13-10	F6-04070006A	26-20	T5-00000002	6-16
F6-04000800A	13-11	F6-04080000	20-19	T5-00000002	11-33
F6-04010004	20-8	F6-04080001	20-21	T5-01010002	2-22
F6-04010100	20-2	F6-05000001	7-3	T5-01010003	2-1
F6-04020001	18-6	F6-05000002	24-6	T5-01010004	2-9
F6-04020002	18-7	F6-05000003	22-8	T5-01010005	2-17
F6-04020003	18-5	F6-05000006	24-1	T5-01010006	2-20
F6-04020004	18-4	F6-05000009	7-19	T5-01010007	2-19
F6-04020100	18-3	F6-05000010	26-1	T5-01010100	2-11
F6-04030000	21-1	F6-05000100	7-7	T5-01010300	2-21
F6-04040002	20-26	F6-05000200	15-1	T5-01010400	2-23
F6-04040003	20-27	F6-05010000	24-9	T5-02000008	6-22
F6-04040004	20-28	F6-06000000	28-1	T5-02010000	6-19
F6-04040005	20-32	F6-06000001	28-6	T5-02010001	6-18
F6-04040006	20-30	F6-06000002	28-13	T5-02010002	6-20
F6-04040007	20-31	F6-06000004	28-2	T5-03000003	11-4
F6-04040008	20-33	F6-07010001	31-9	T5-03000004-1	11-26
F6-04040009	20-35	F6-08000000-5	28-15	T5-03000004-2	11-26
F6-04040100	20-12	F6-08000000-6	28-15	T5-03000005	11-27
F6-04050001	21-15	F8-01010001	2-16	T5-03000006	11-15
F6-04050002	21-14	F8-01010103	2-26	T5-03000007	11-14

零件检索表

PARTS NAME: PARTS CATALOGUE INDEX

零件代号 PART NO.	页码/序号 PAGE/NO.	零件代号 PART NO.	页码/序号 PAGE/NO.	零件代号 PART NO.	页码/序号 PAGE/NO.
T5-03000009	11-3				
T5-03000012	11-6				
T5-03000013	11-5				
T5-03000014	11-7				
T5-03000015	12-50				
T5-03000016	12-40				
T5-03000017	11-32				
T5-03000020	11-21				
T5-03000022	11-22				
T5-03000023	11-23				
T5-03000201	11-17				
T5-03000202	11-25				
T5-03000300	11-12				
T5-03000400	12-45				
T5-03000401	12-49				
T5-03000402	12-48				
T5-03000403	12-47				
T5-03000404	12-44				
T5-03000500	12-52				
T5-03000501	12-56				
T5-03000600	12-51				
T5-03000700	11-29				
T5-03000800	12-58				
T5-03010000	12-43				
T5-04000015	22-3				
T6-03000002	24-18				
T6-05000021	20-17				
TLA1412Z	11-28				